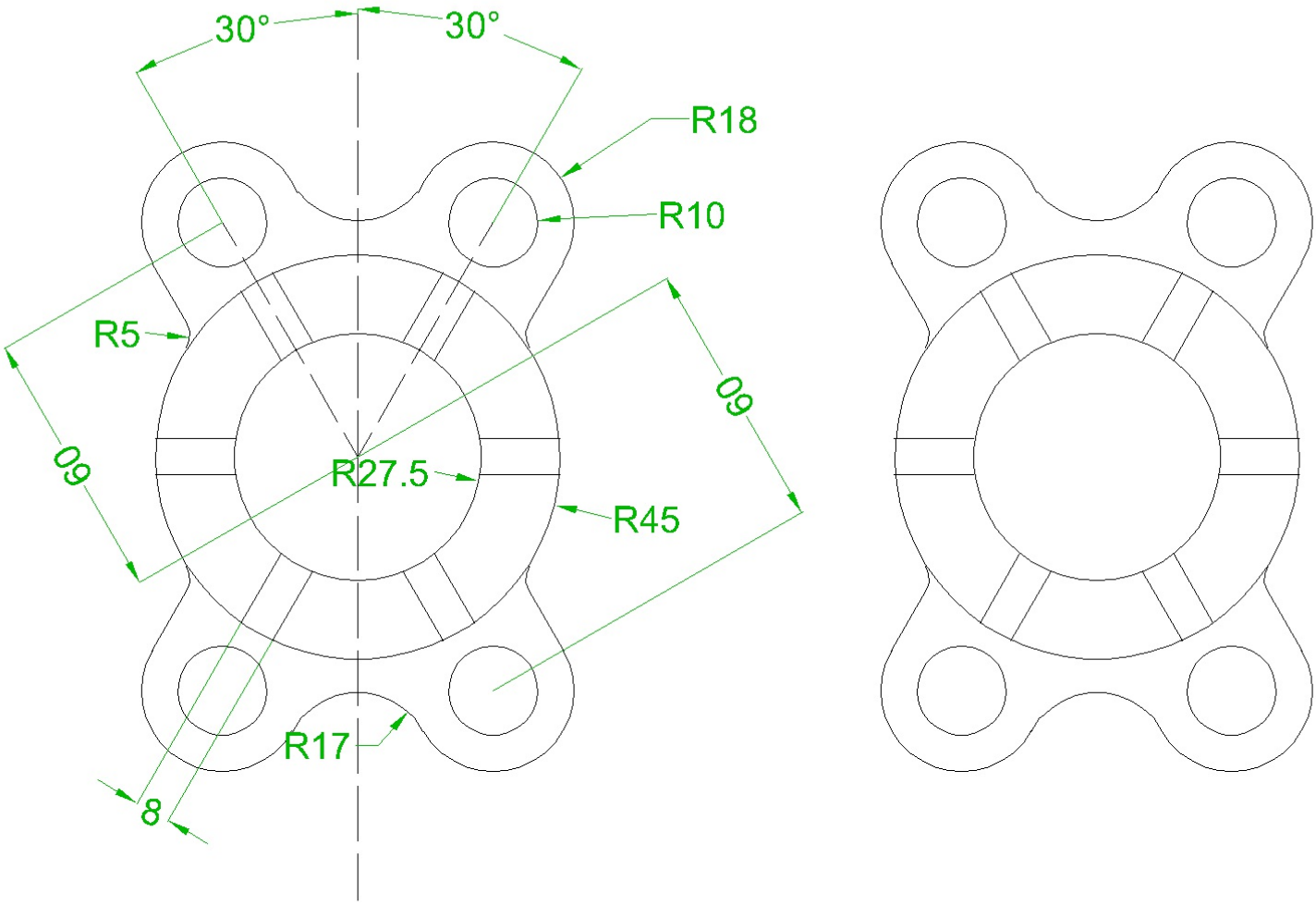
30°
30°
R18
R10
R5
Ø60
Ø60
R27.5
R45
R17
8

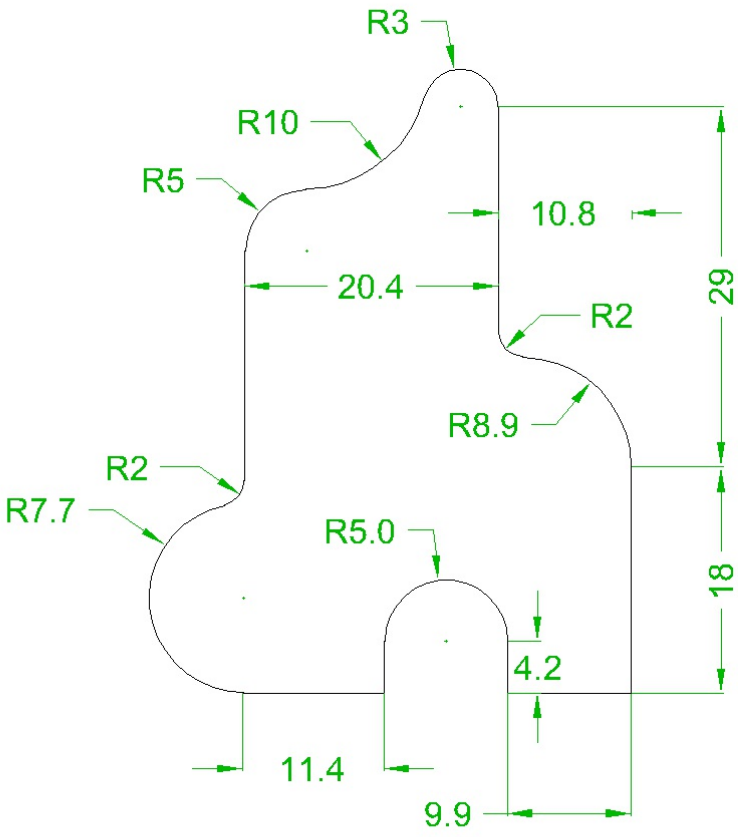
R3
R10
R5
10.8
20.4
29
R2
R8.9
R2
R7.7
R5.0
18
4.2
11.4
9.9

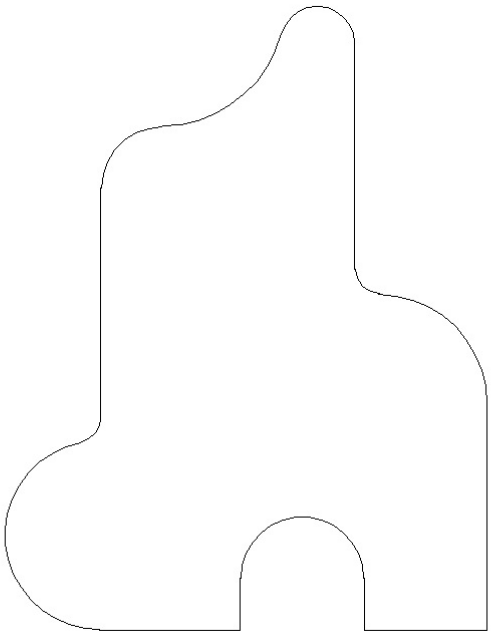

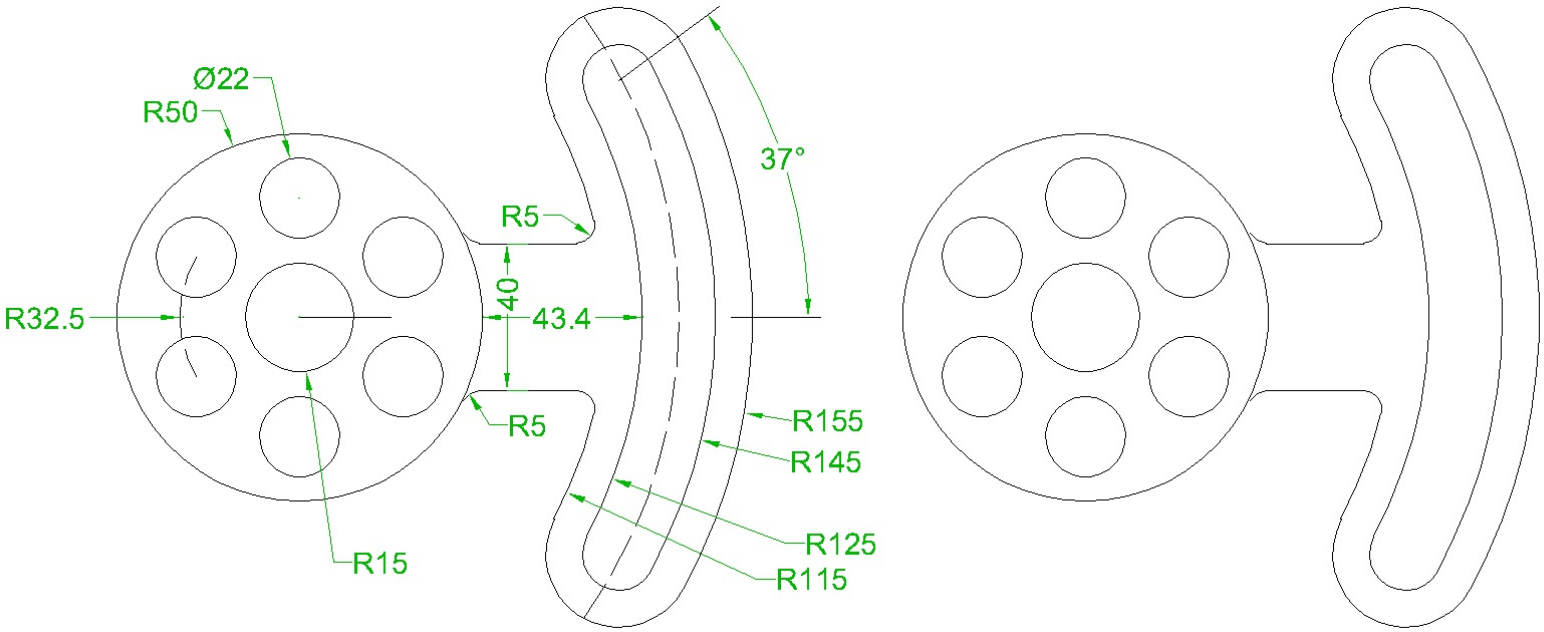
Ø22
R50
R32.5
R15
R5
40
43.4
R5
37°
R155
R145
R125
R115

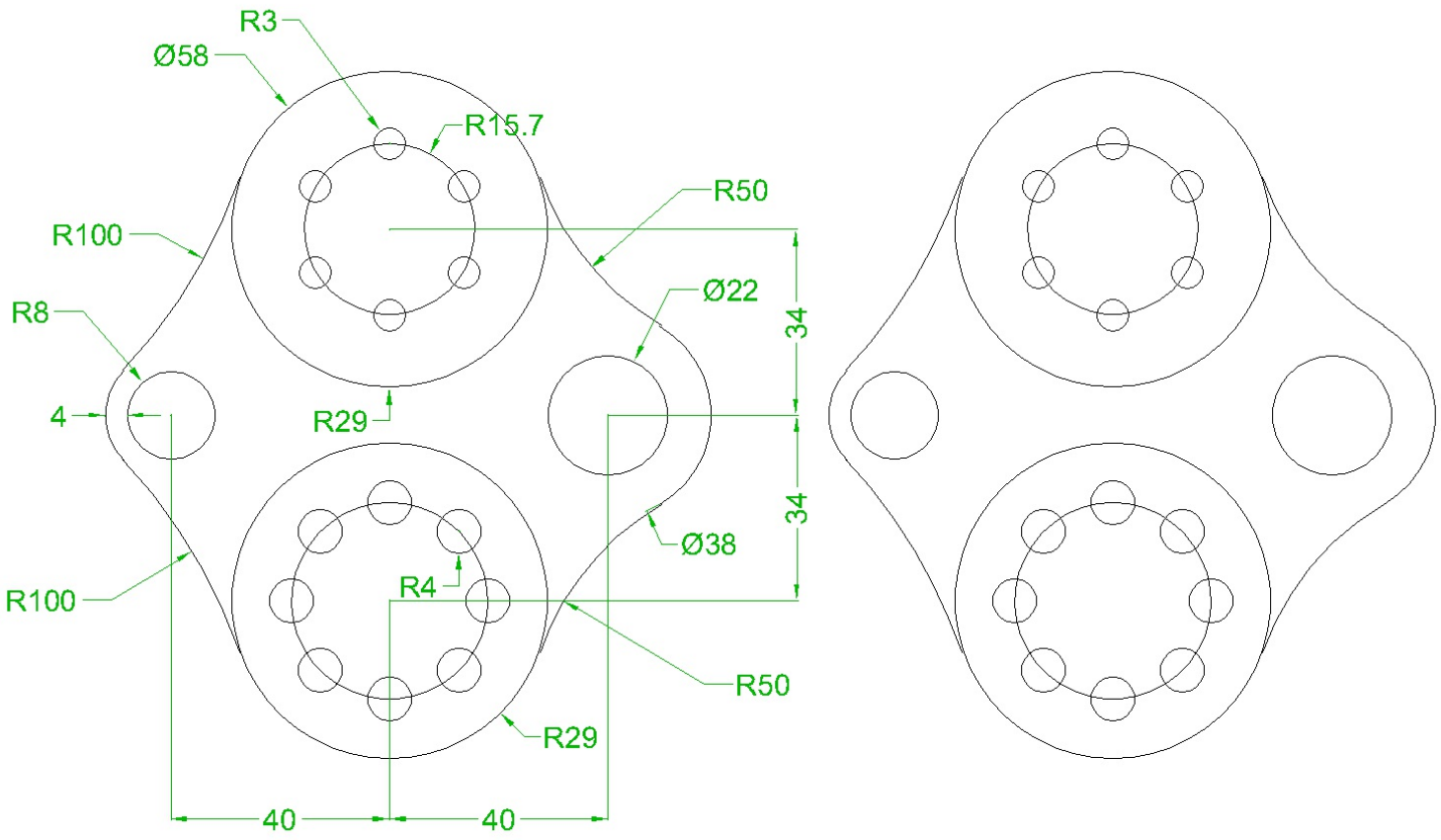
R3
Ø58
R15.7
R50
R100
Ø22
R8
34
4
R29
34
Ø38
R100
R4
R50
R29
40
40

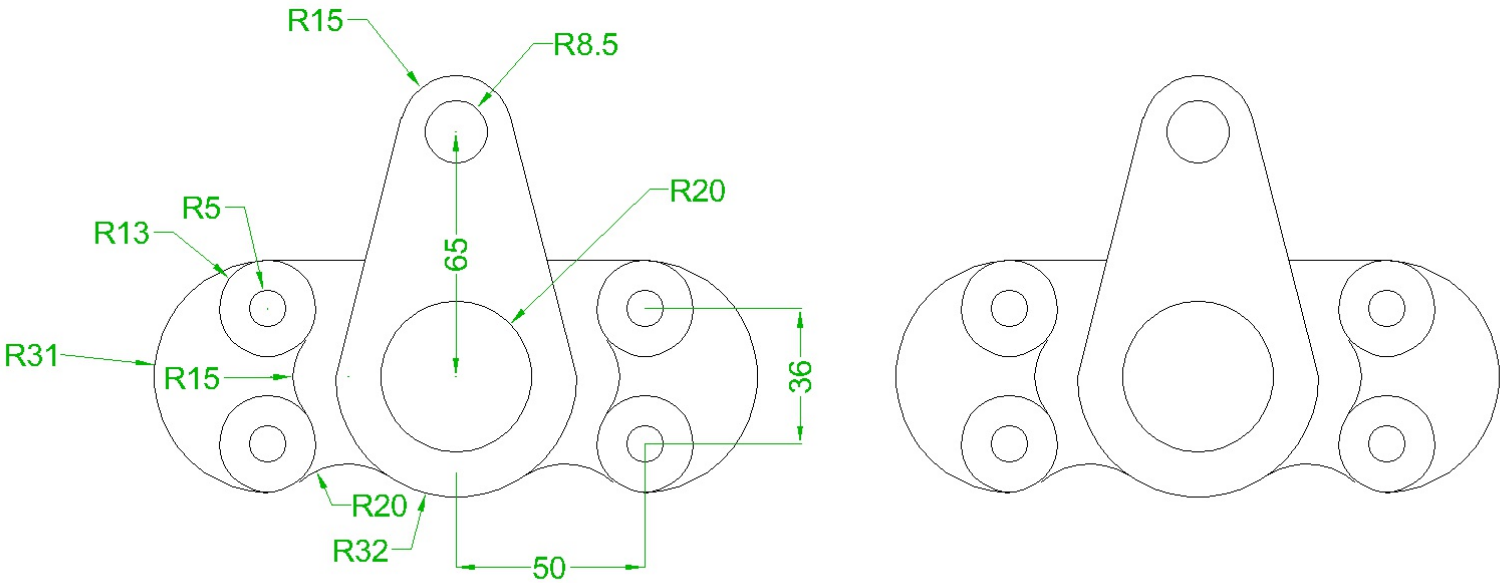
R15
R8.5
R5
R13
R20
65
R31
R15
36
R20
R32
50

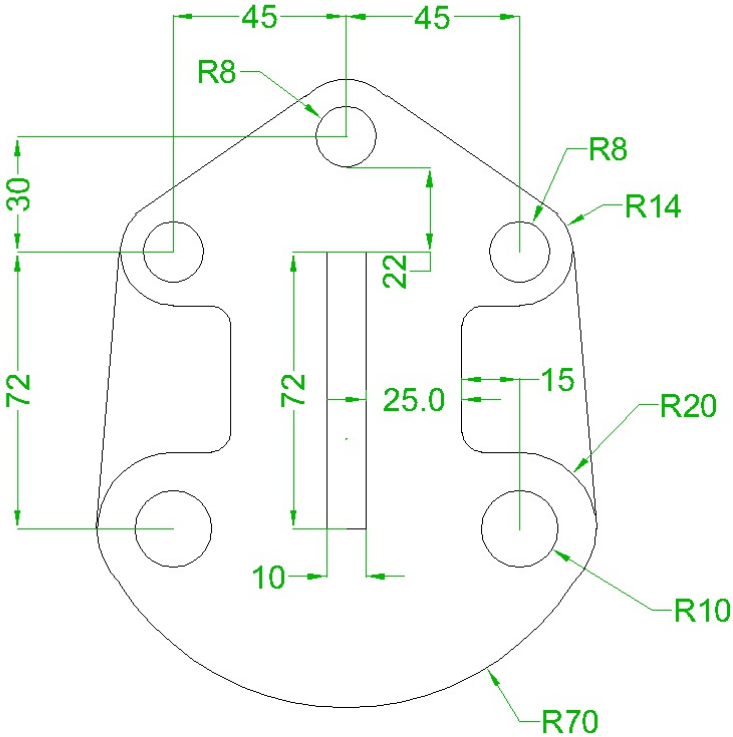
45
45
R8
R8
R14
30
22
72
72
25.0
15
R20
10
R10
R70

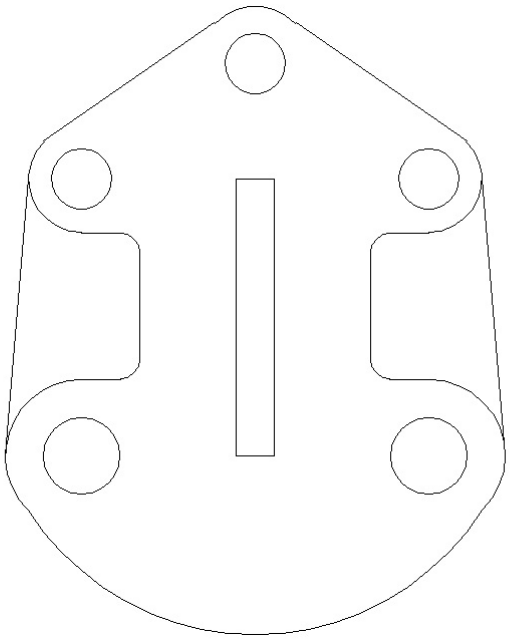

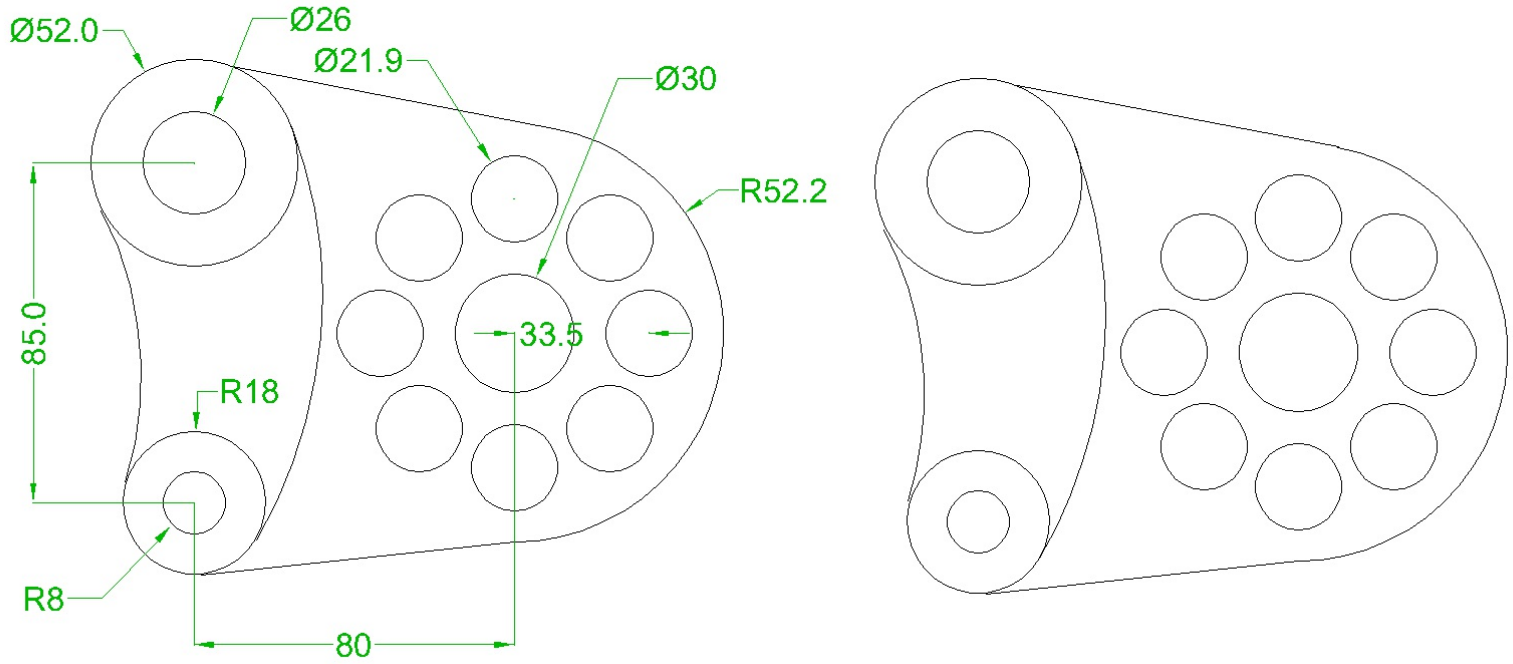
Ø52.0
Ø26
Ø21.9
Ø30
R52.2
85.0
33.5
R18
R8
80

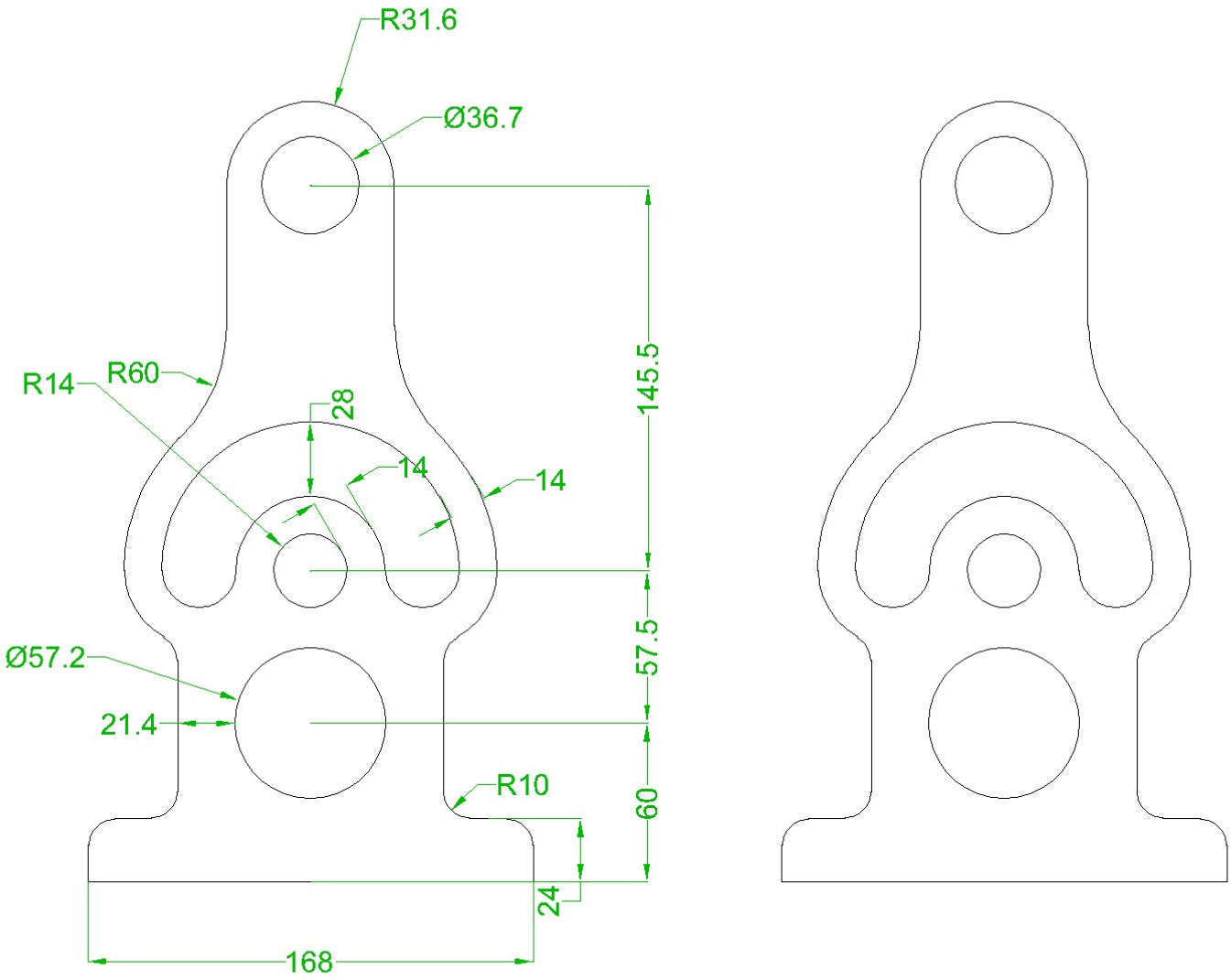
R31.6
Ø36.7
R14
R60
28
14
14
145.5
57.5
Ø57.2
21.4
R10
60
24
168

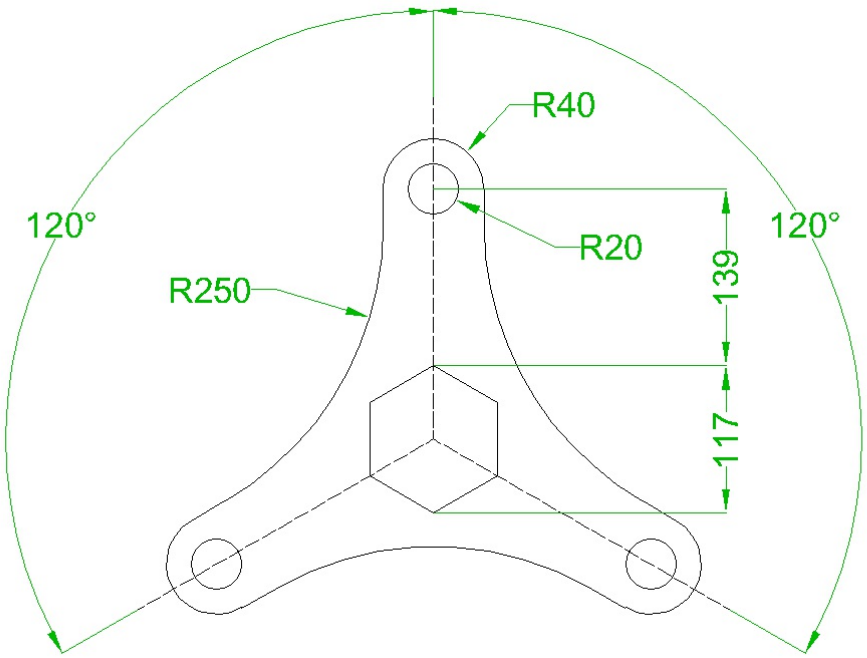
R40
120°
120°
R20
R250
139
117

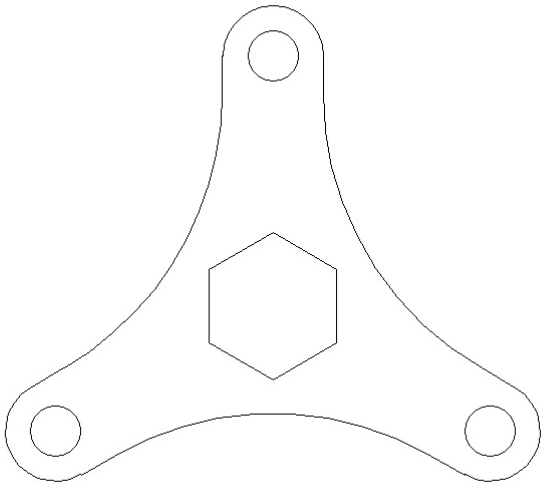

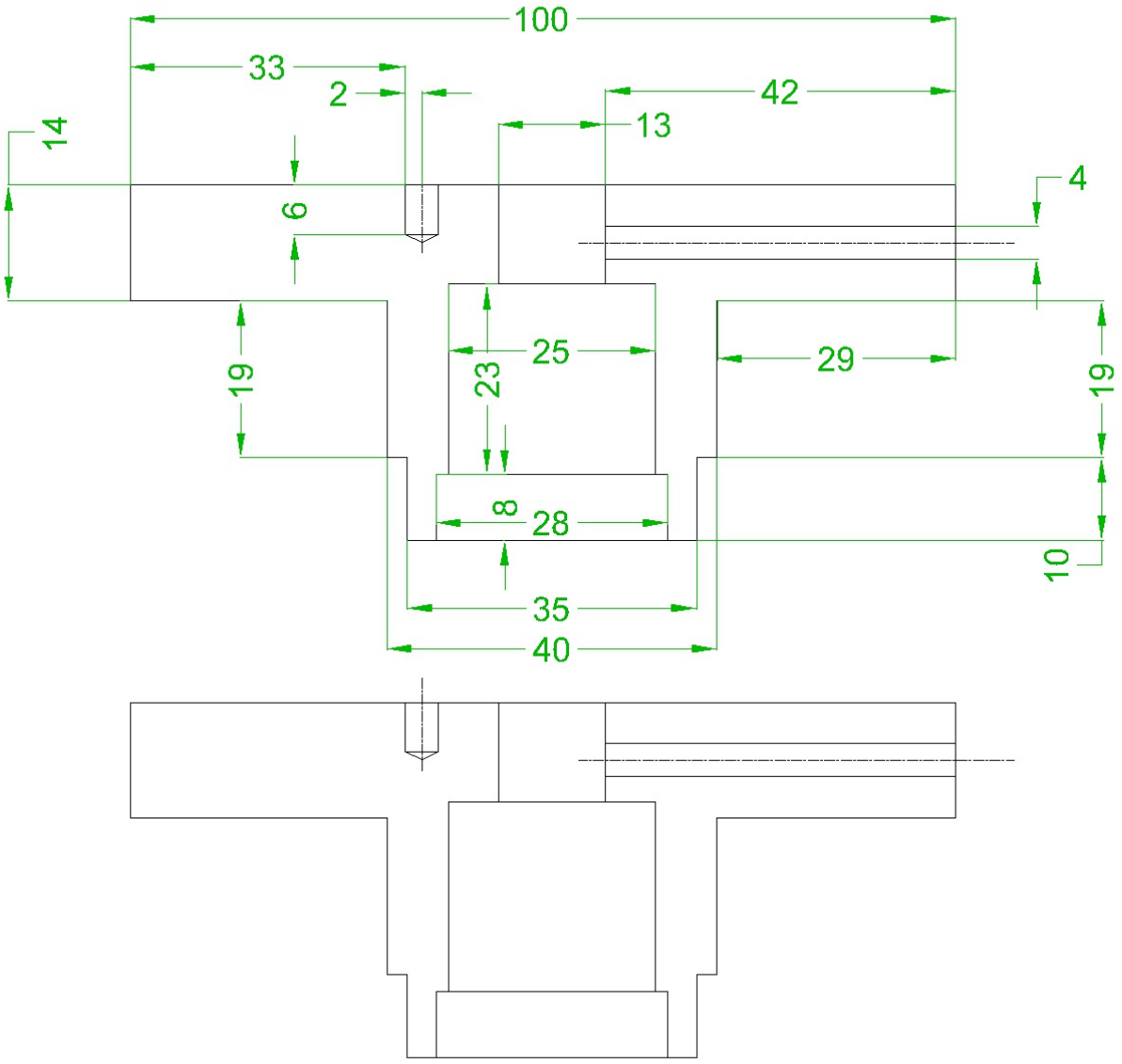
100
33
2
42
13
14
4
6
25
29
19
23
19
8
28
10
35
40

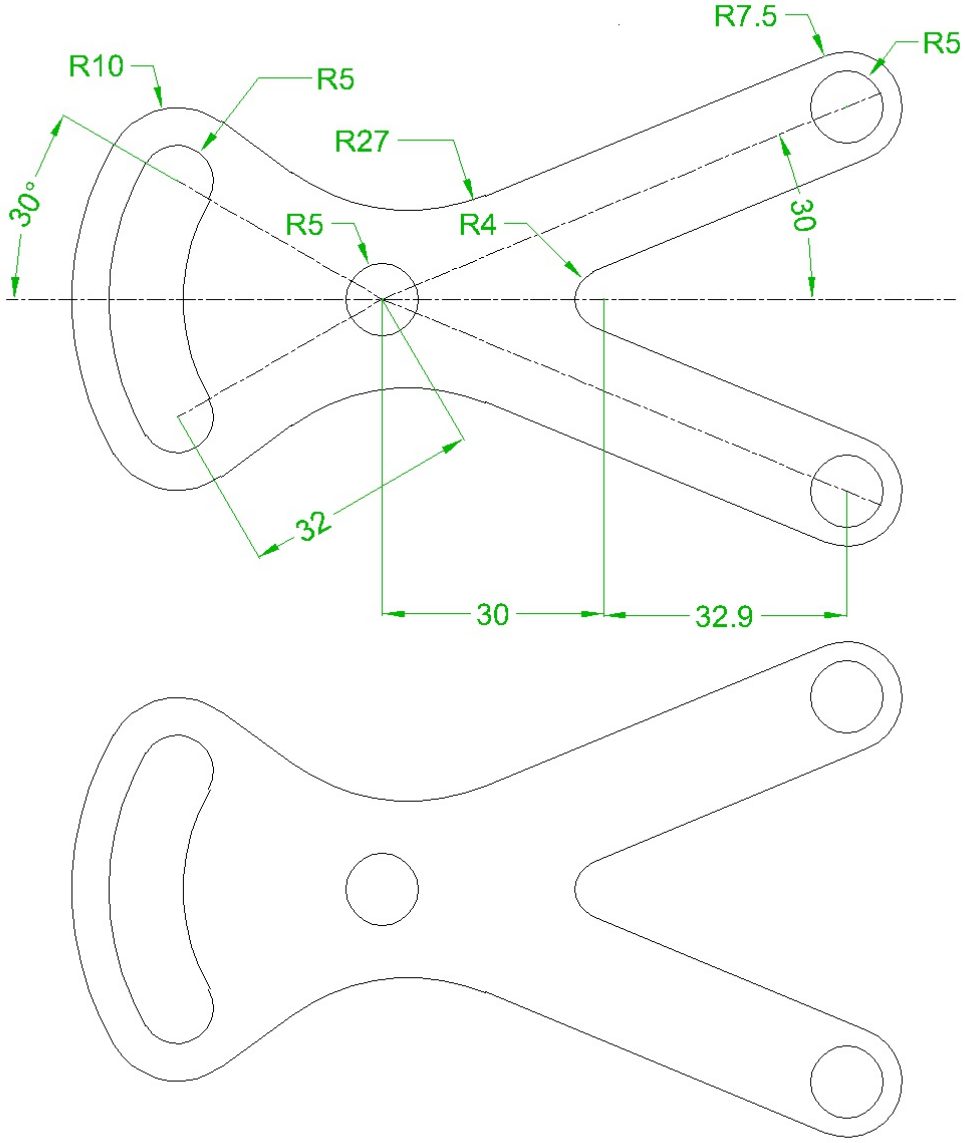
R7.5
R5
R10
R5
R27
30°
R5
R4
30
32
30
32.9

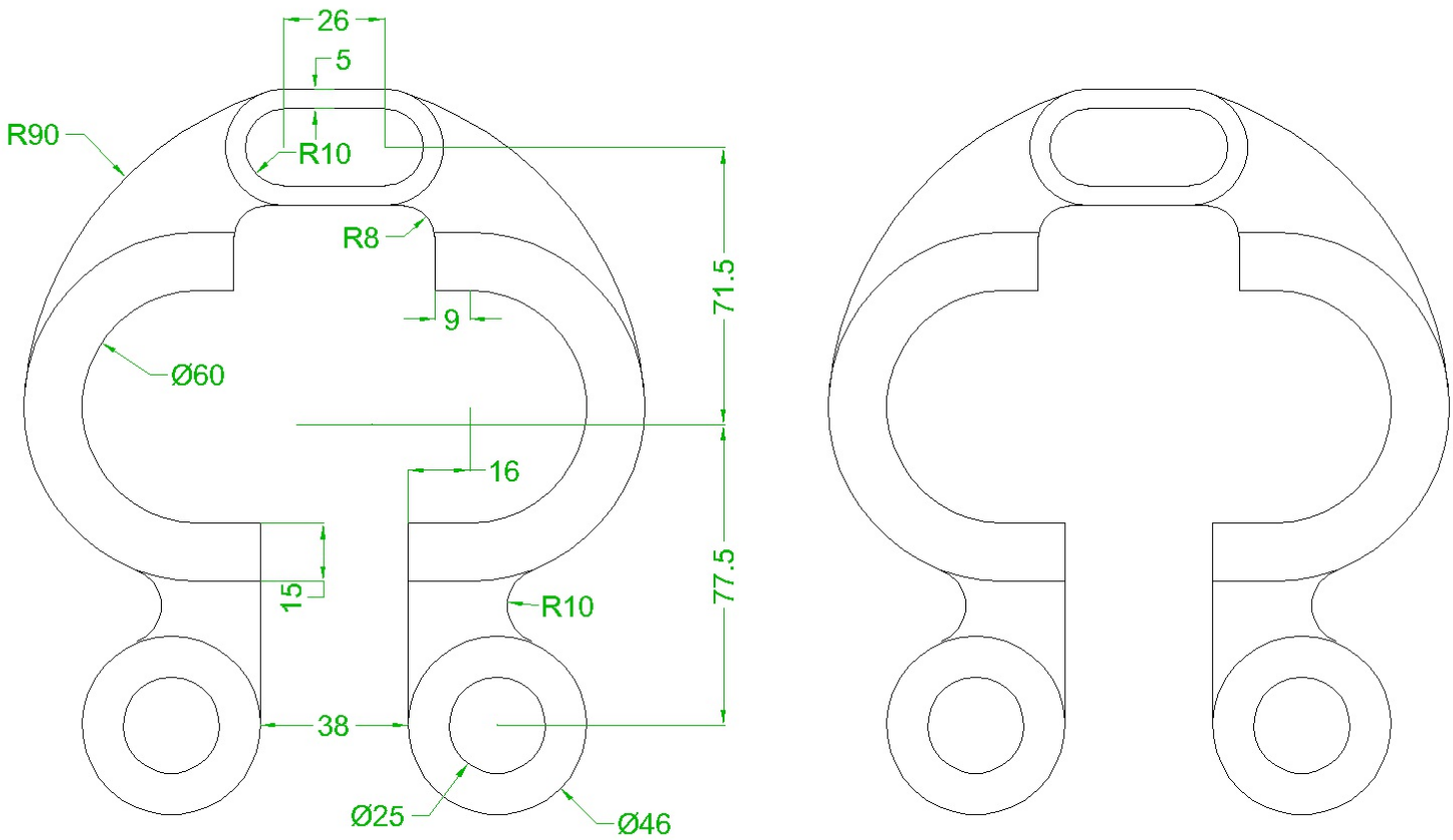
26
5
R90
R10
R8
9
71.5
Ø60
16
15
R10
77.5
38
Ø25
Ø46

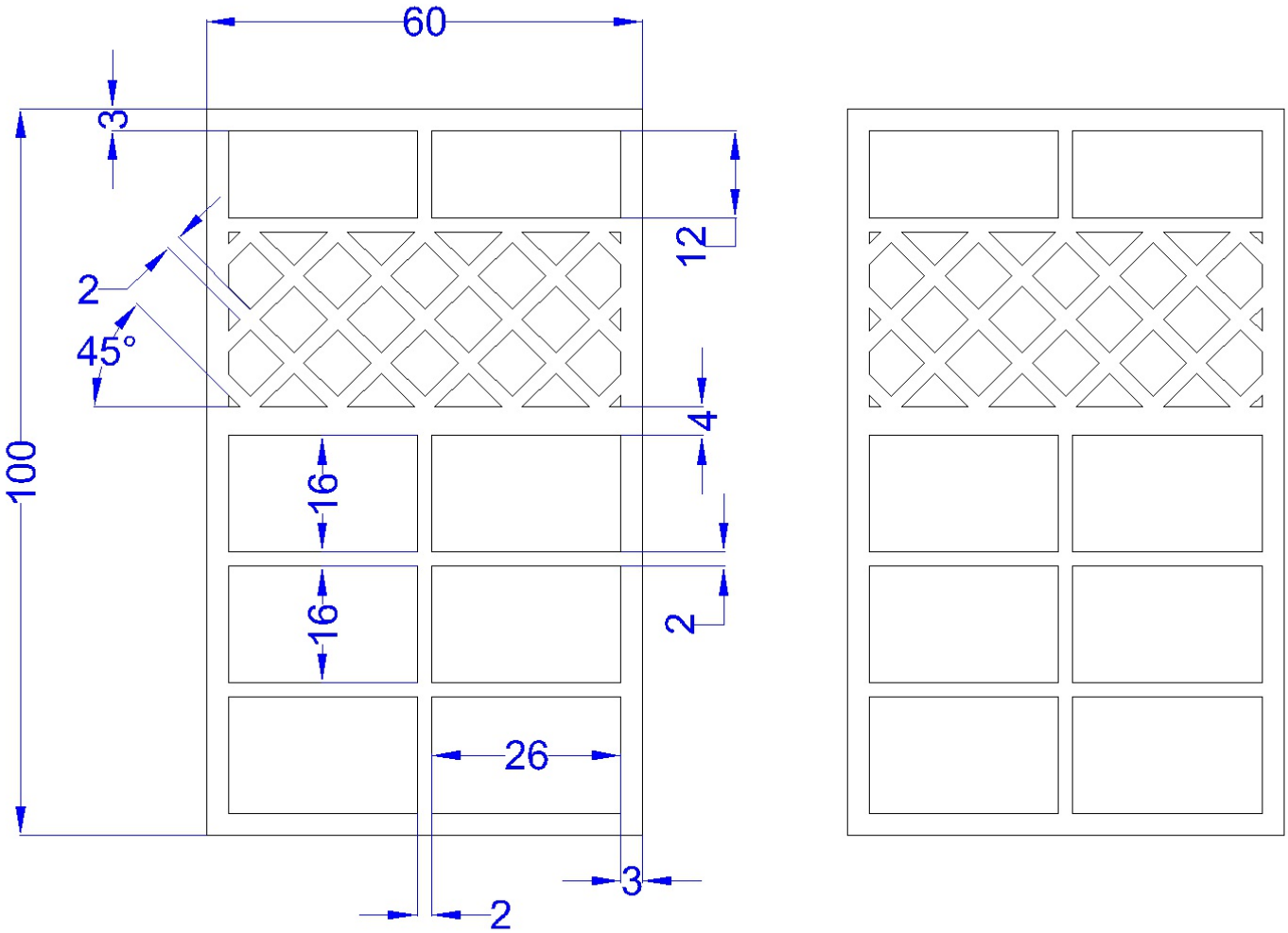
60
3
12
2
45°
4
100
16
16
2
26
3
2

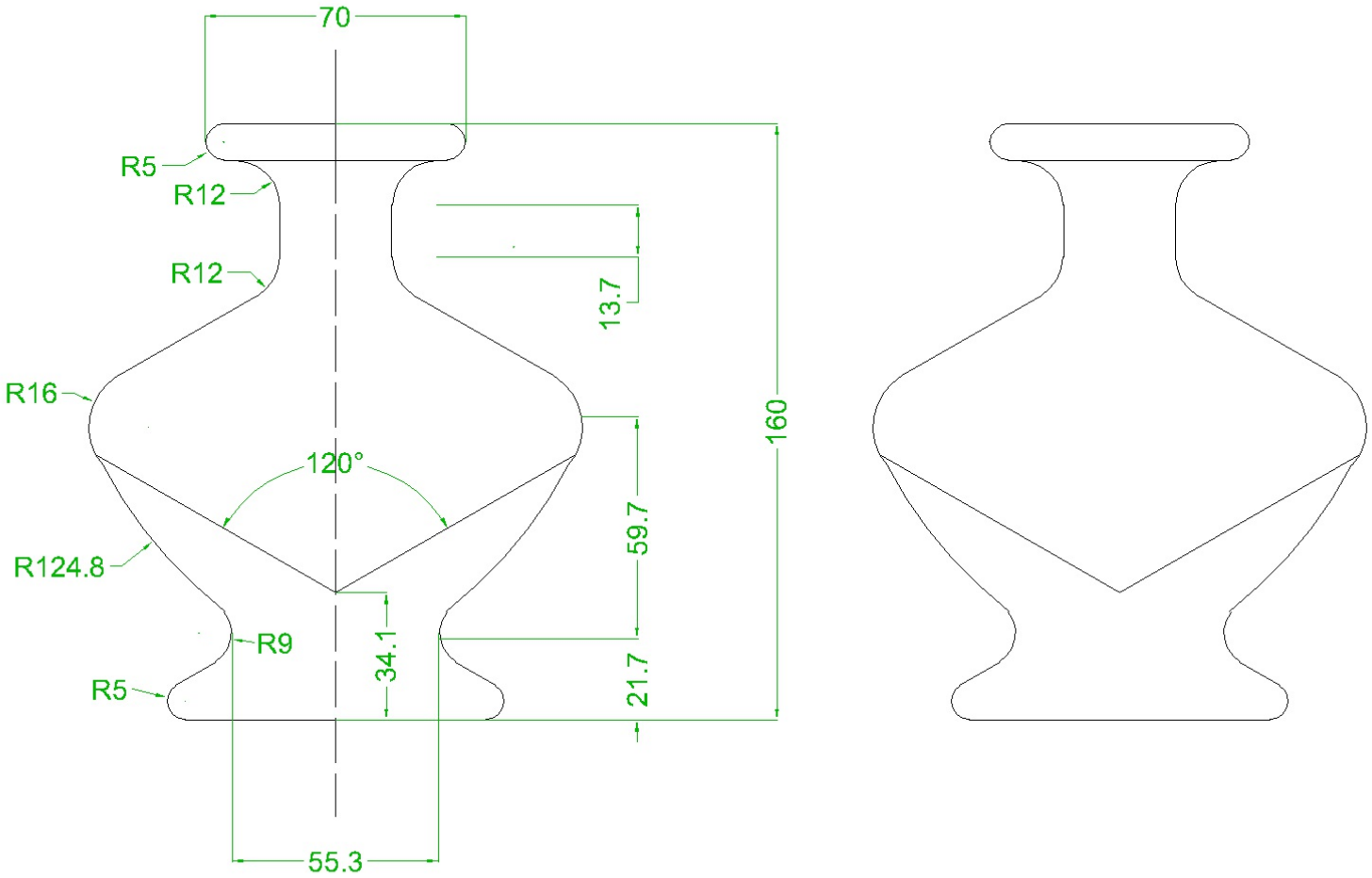
70
R5
R12
R12
13.7
R16
160
120°
59.7
R124.8
R9
34.1
R5
21.7
55.3

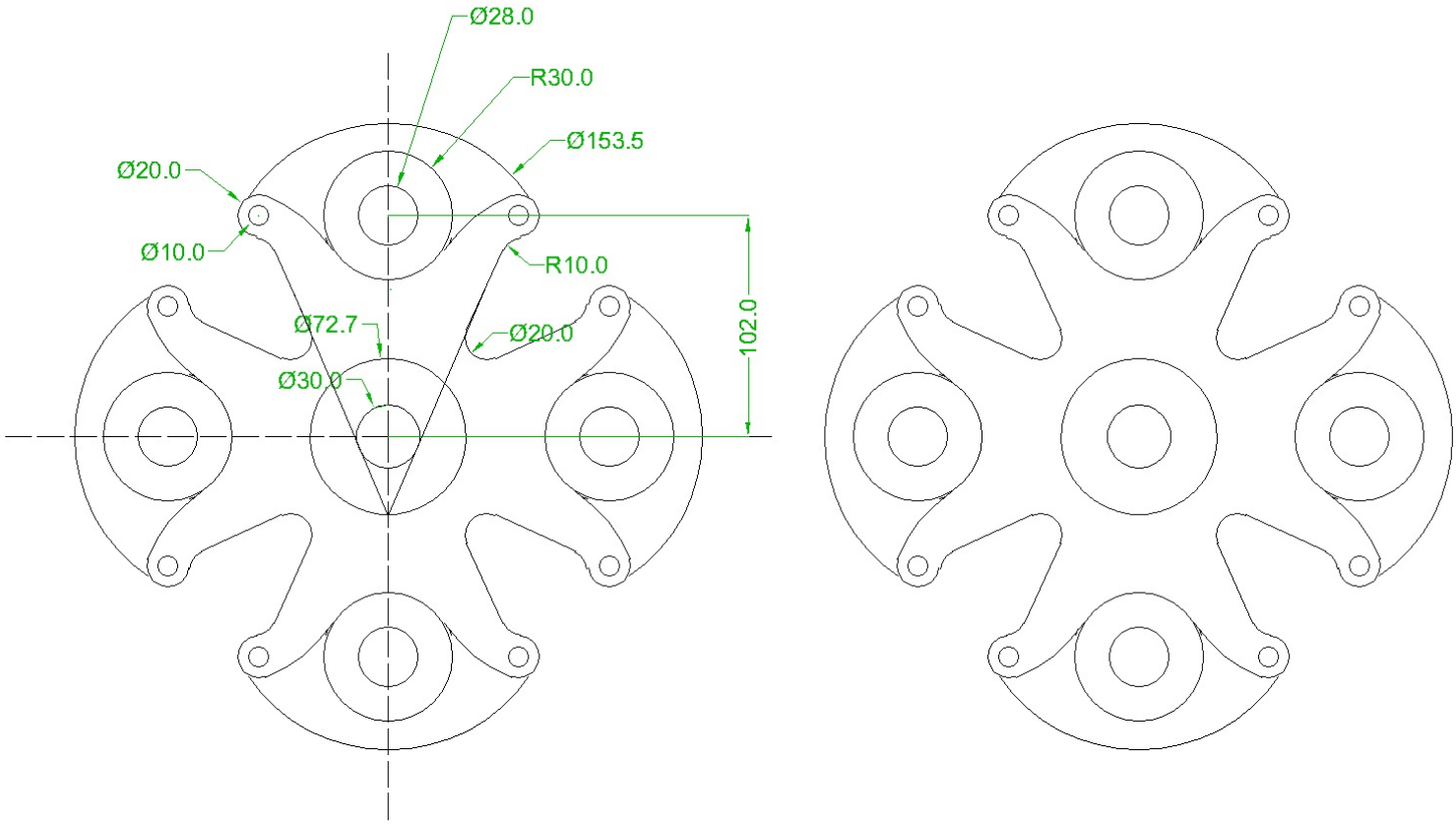
Ø28.0
R30.0
Ø153.5
Ø20.0
Ø10.0
R10.0
Ø72.7
Ø20.0
Ø30.0
102.0

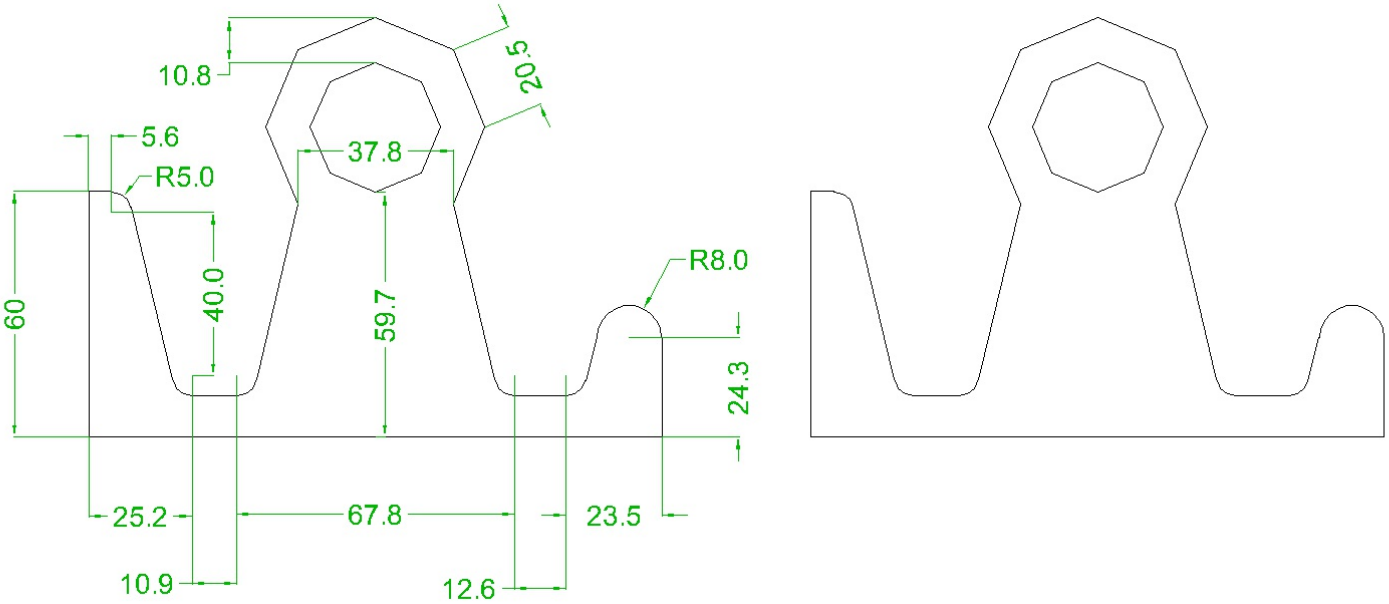
10.8
20.5
5.6
37.8
R5.0
R8.0
60
40.0
59.7
24.3
25.2
67.8
23.5
10.9
12.6

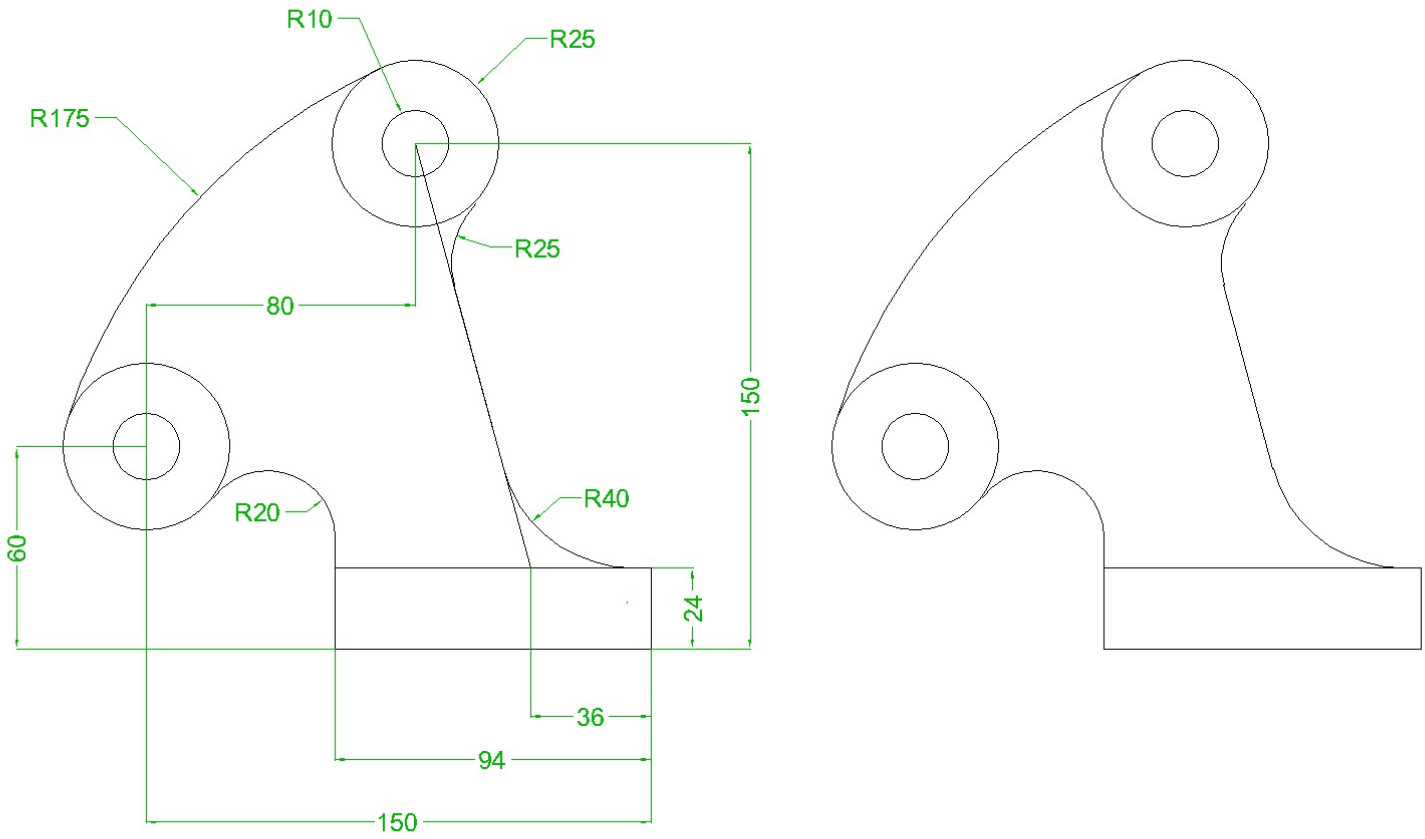
R10
R25
R175
R25
80
150
R40
R20
60
24
36
94
150

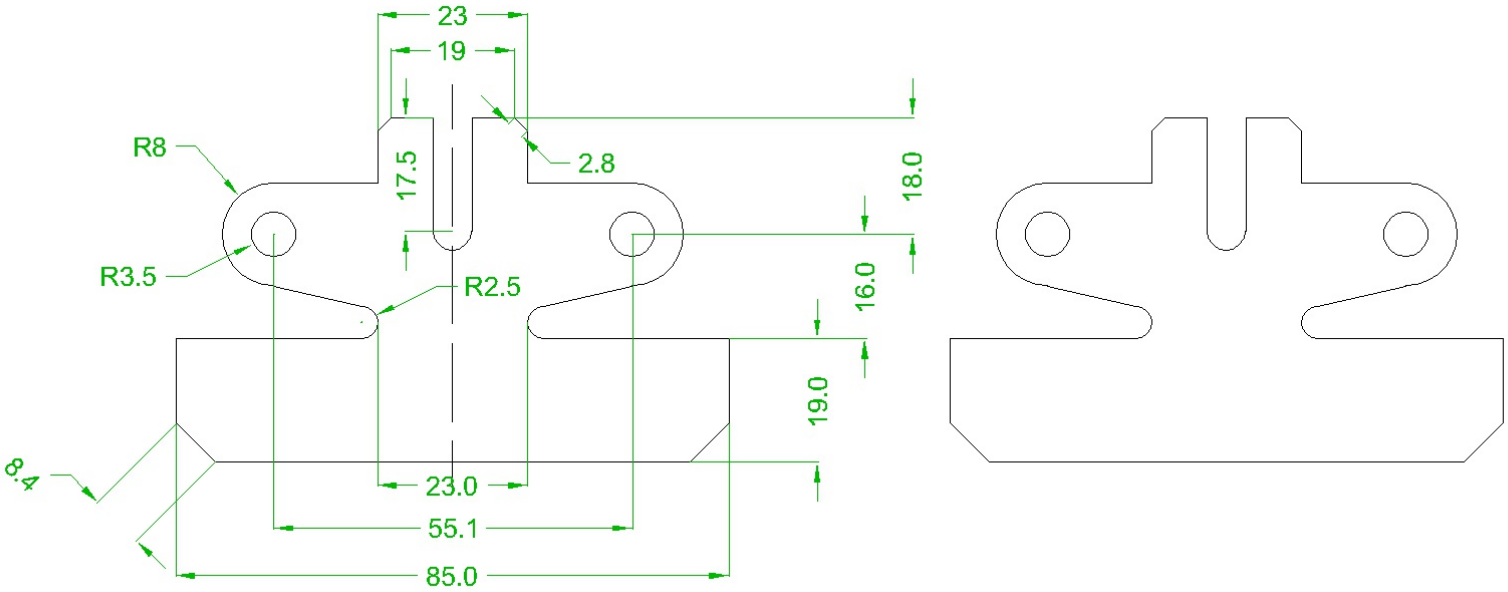
23
19
R8
17.5
2.8
18.0
R3.5
R2.5
16.0
19.0
8.4
23.0
55.1
85.0

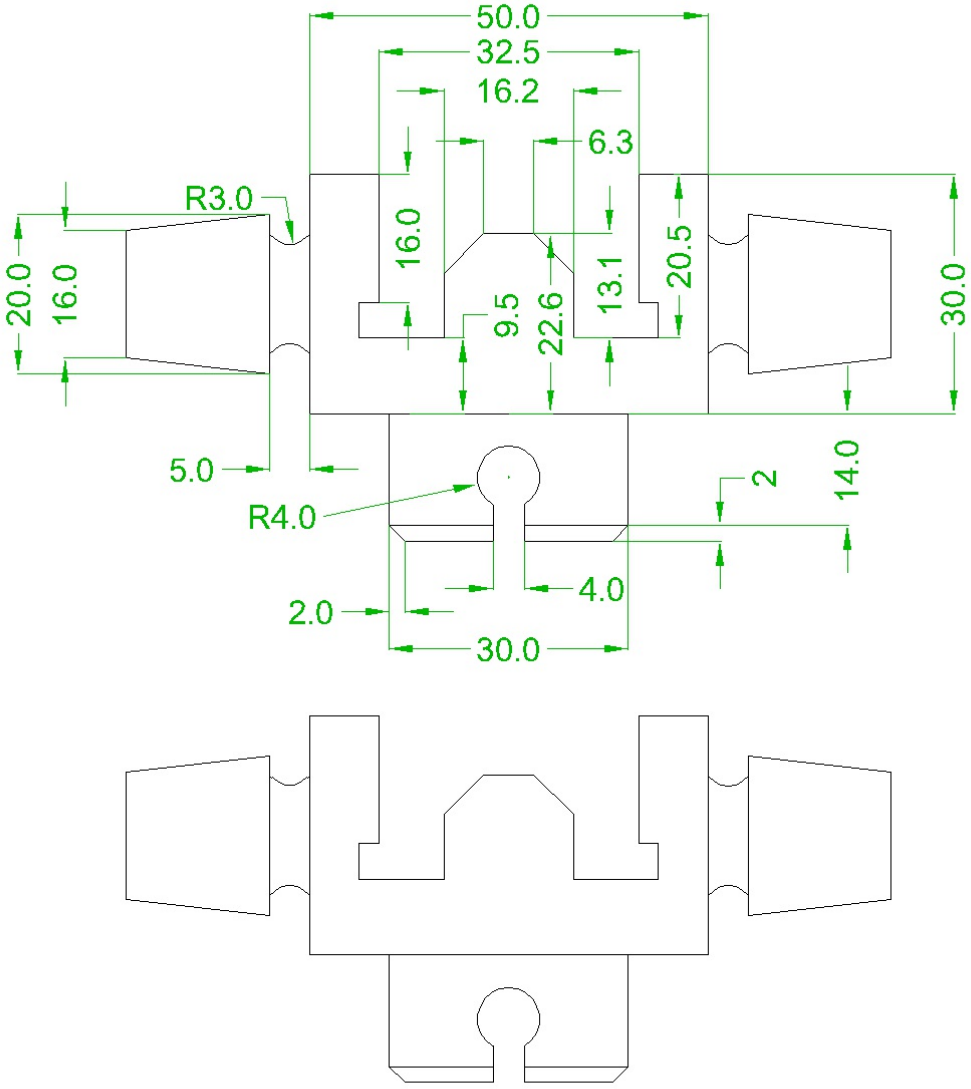
50.0
32.5
16.2
6.3
R3.0
16.0
20.5
13.1
22.6
9.5
20.0
16.0
30.0
5.0
R4.0
2
14.0
4.0
2.0
30.0

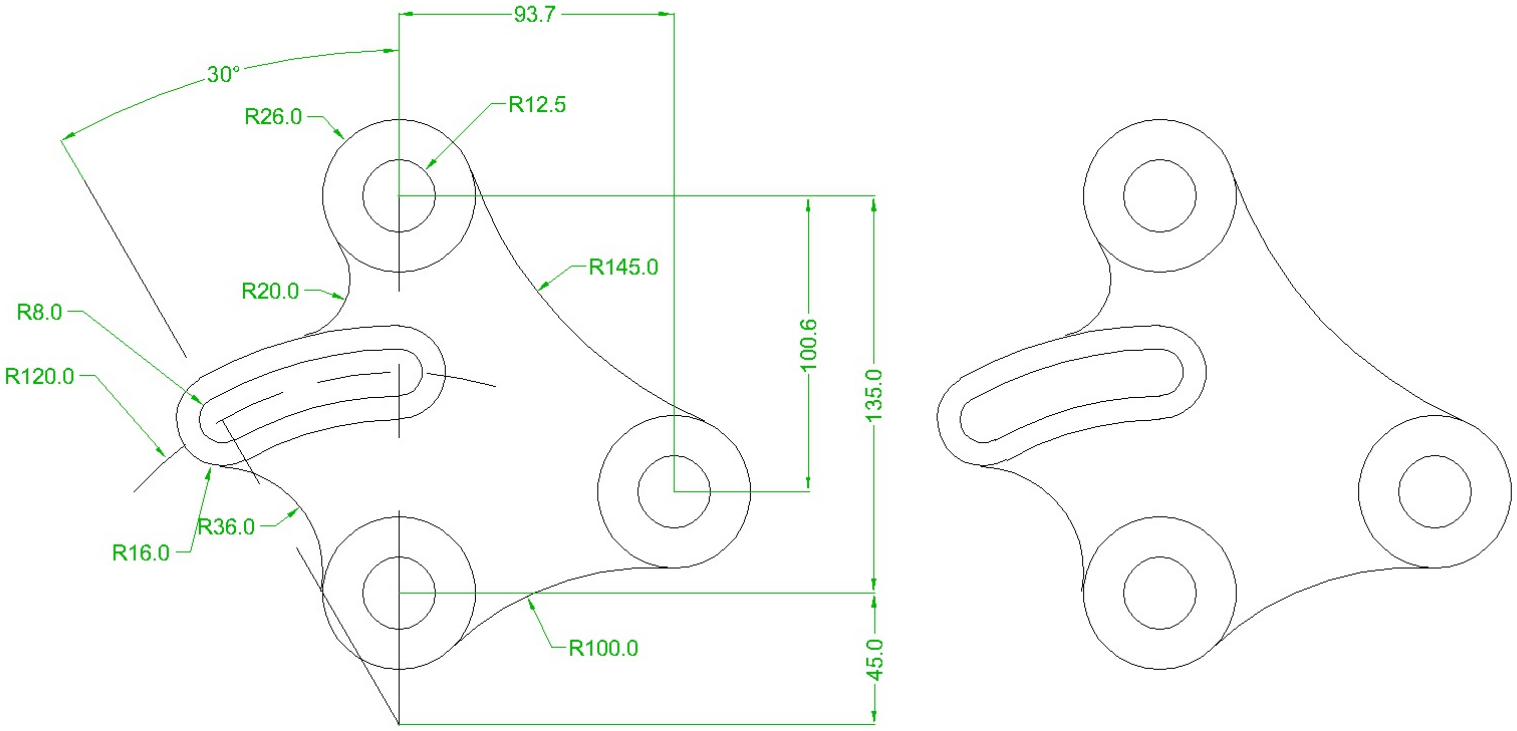
93.7
30°
R26.0
R12.5
R145.0
R20.0
R8.0
R120.0
100.6
135.0
R36.0
R16.0
R100.0
45.0

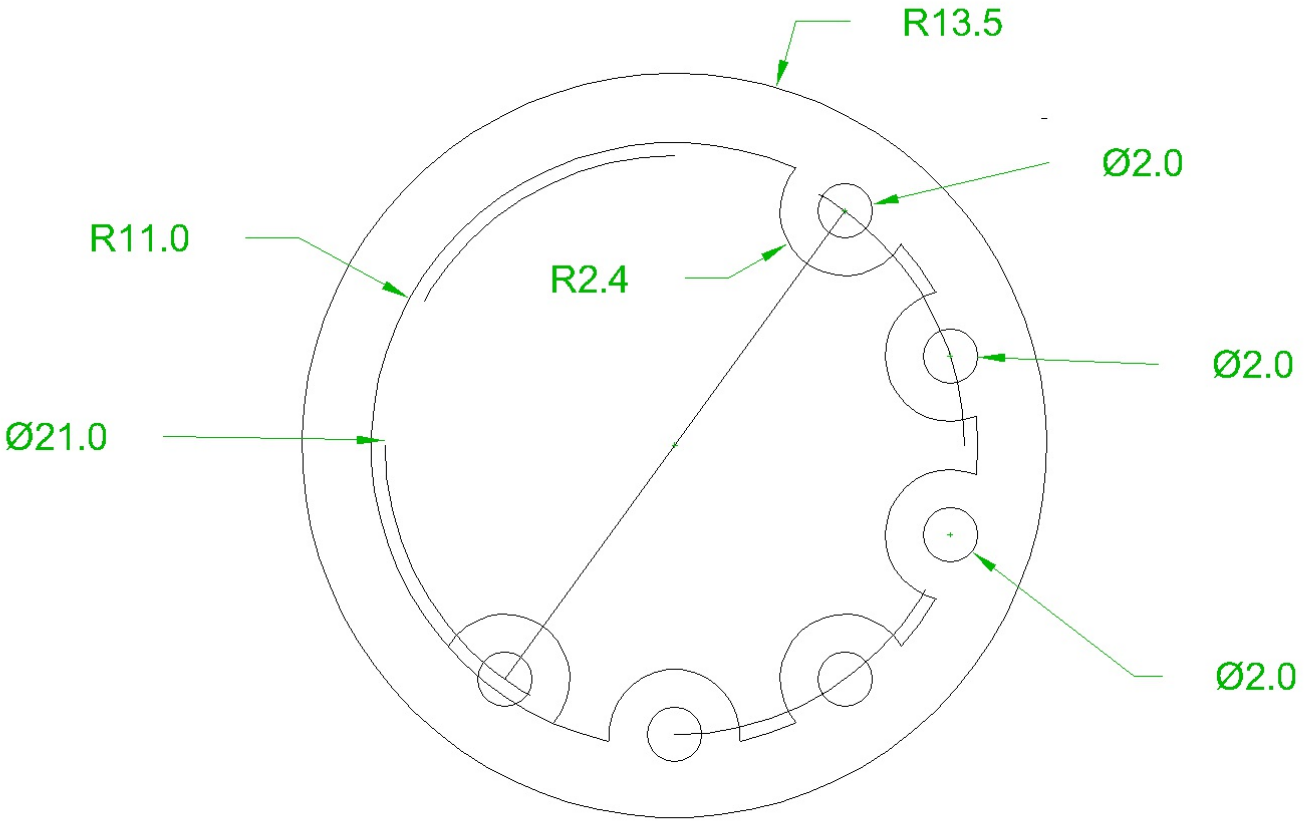
R13.5
Ø2.0
R11.0
R2.4
Ø2.0
Ø21.0
Ø2.0

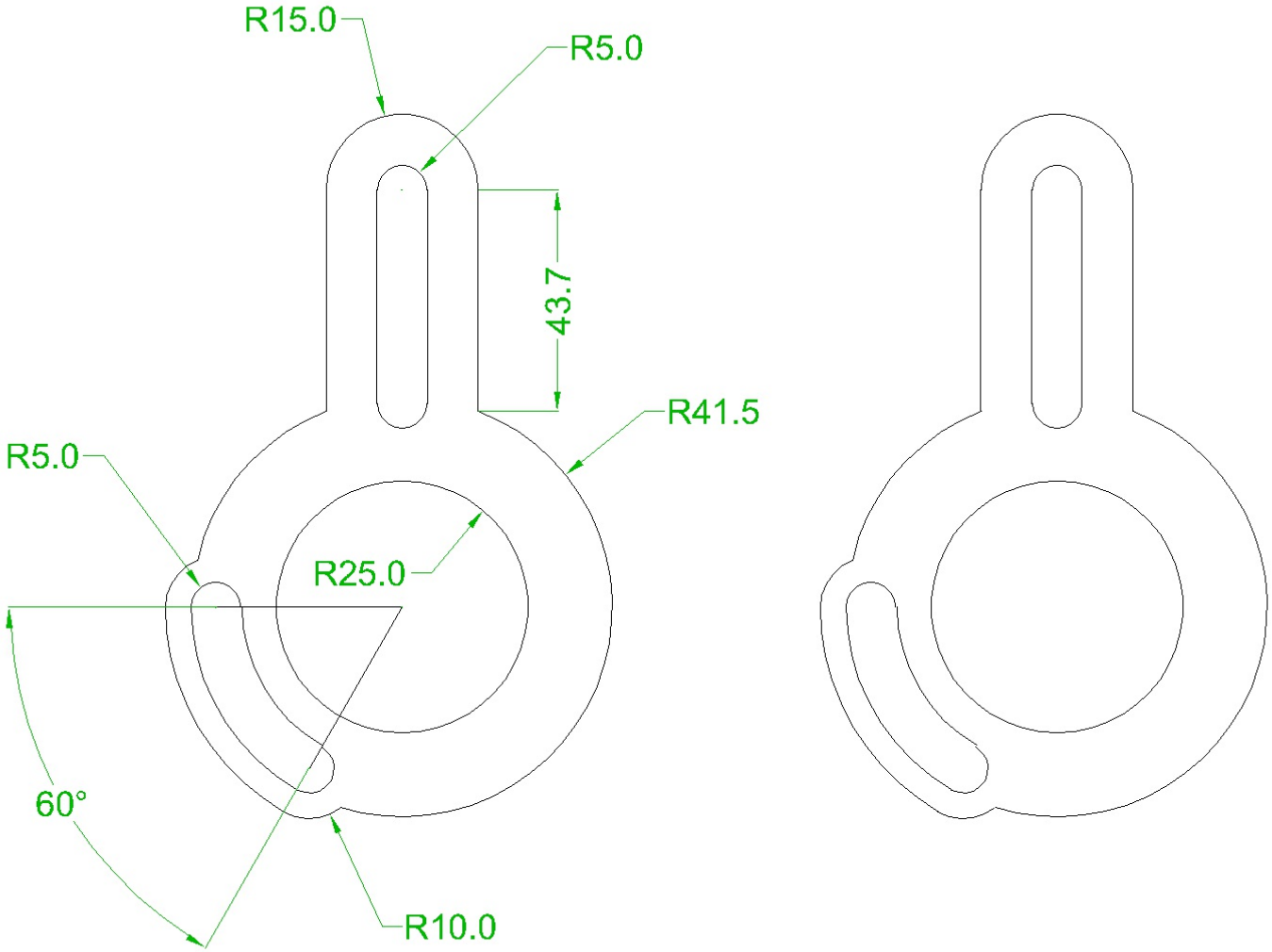
R15.0
R5.0
43.7
R41.5
R5.0
R25.0
60°
R10.0

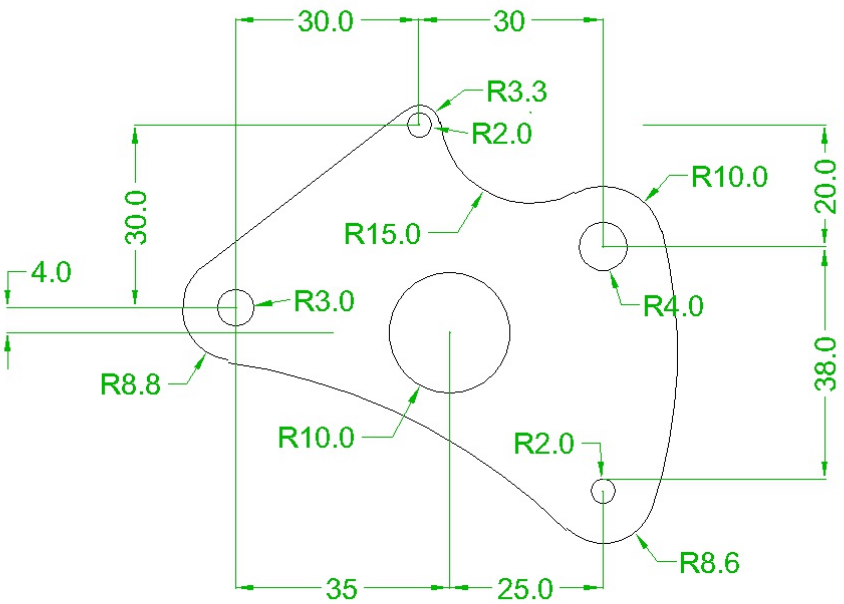
30.0
30
R3.3
R2.0
R10.0
20.0
30.0
R15.0
4.0
R3.0
R4.0
38.0
R8.8
R10.0
R2.0
R8.6
35
25.0

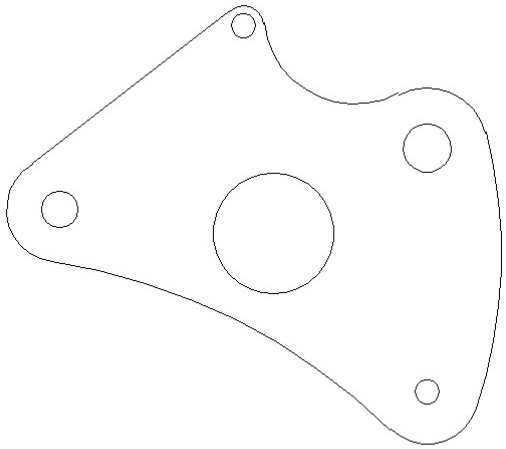

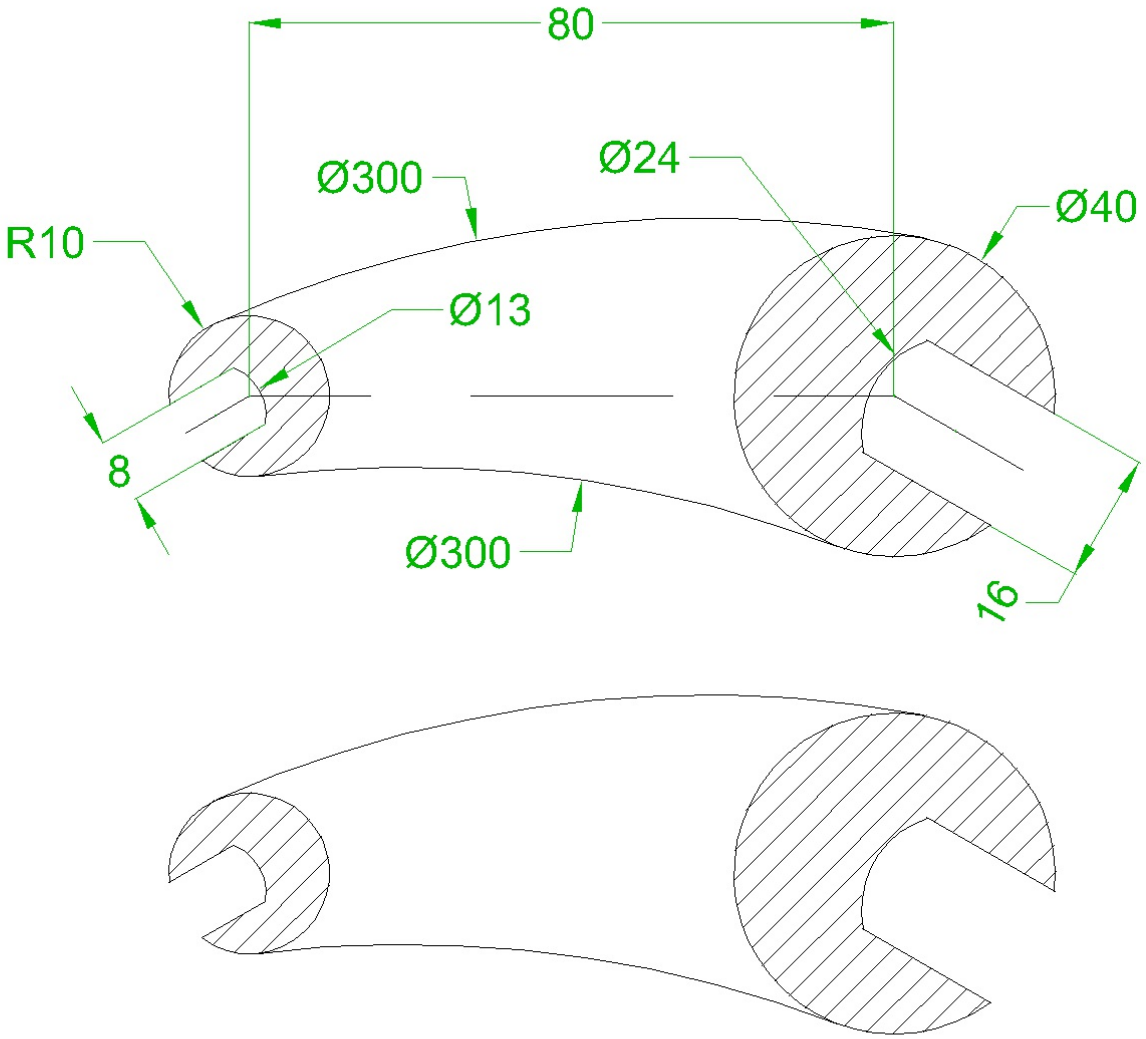
80
Ø300
Ø24
Ø40
R10
Ø13
8
Ø300
16

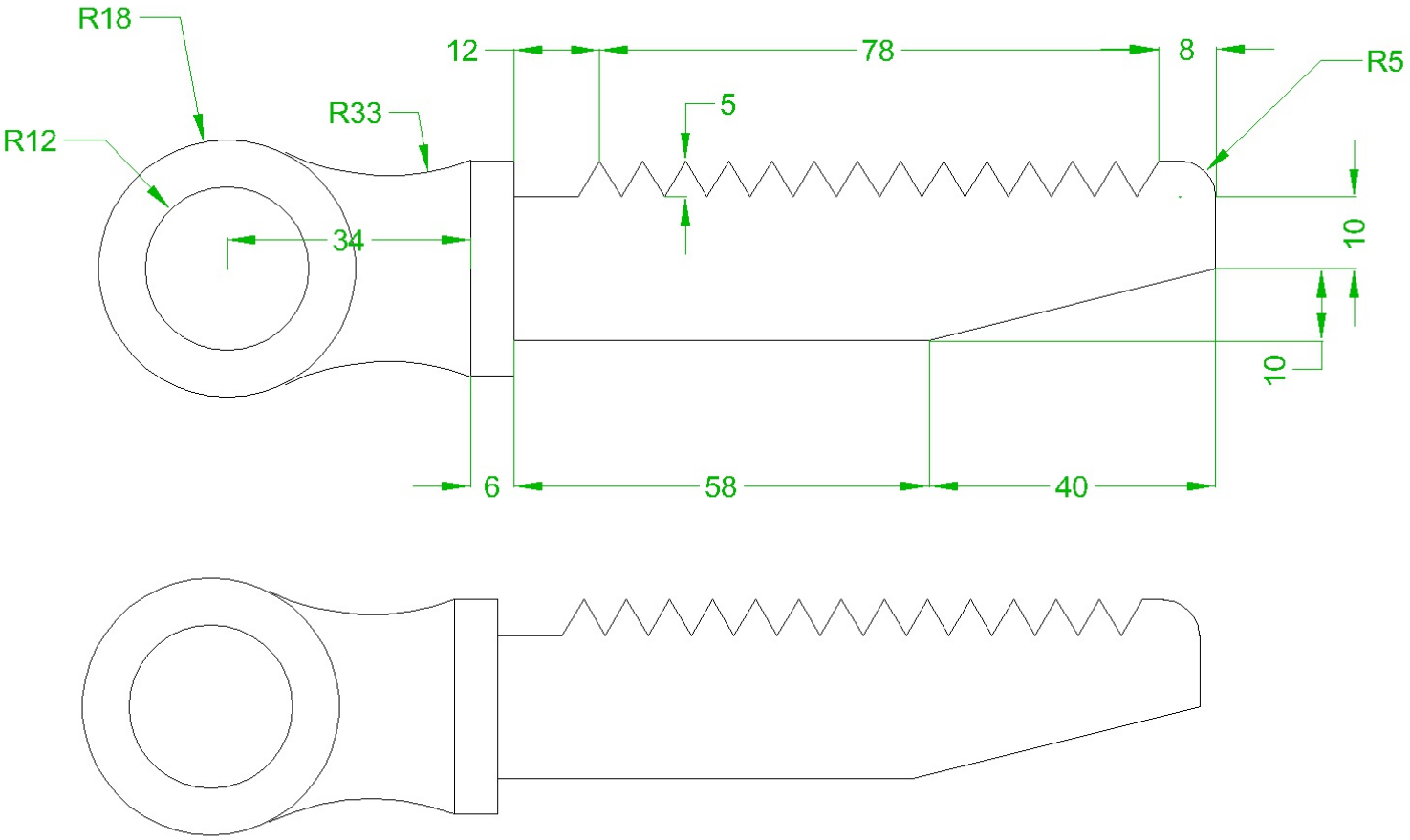
R18
R12
R33
12
78
8
R5
5
34
10
10
6
58
40

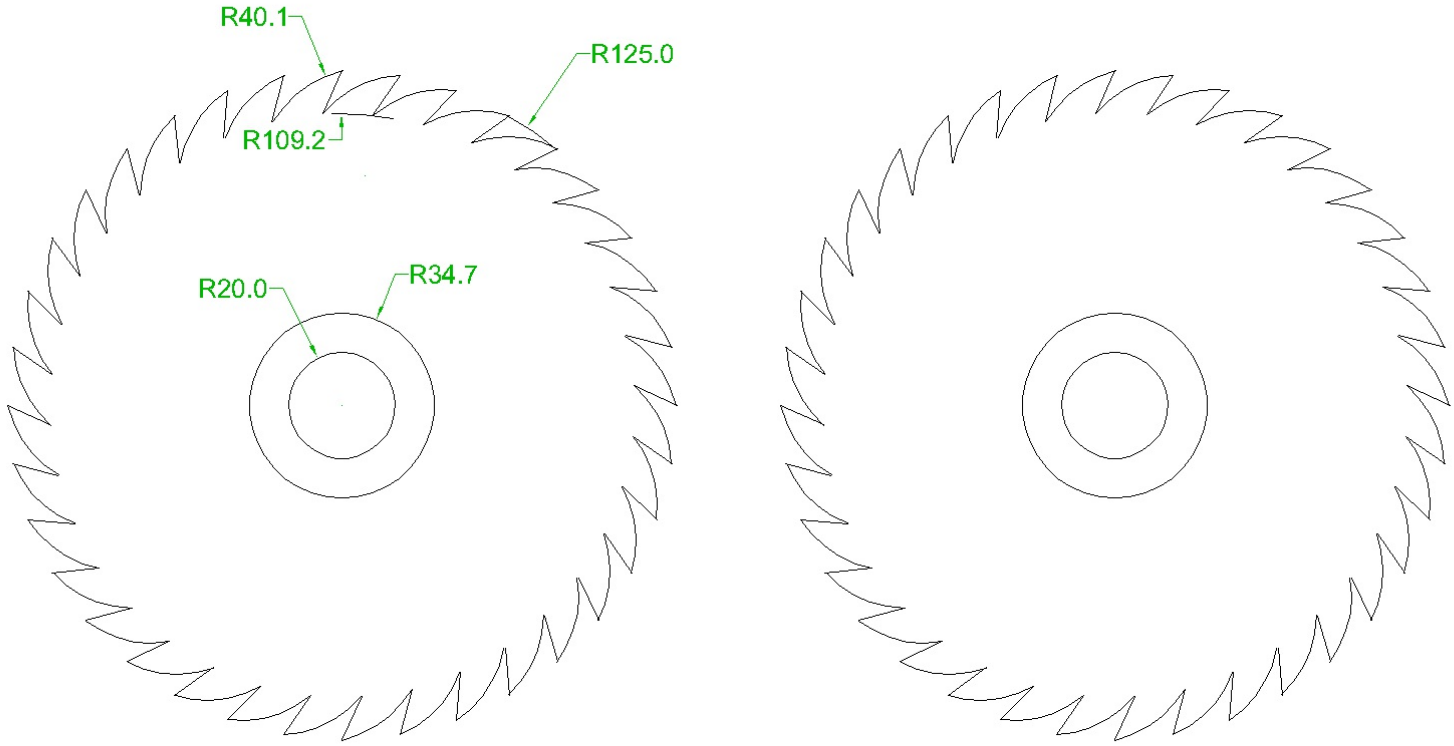
R40.1
R125.0
R109.2
R20.0
R34.7

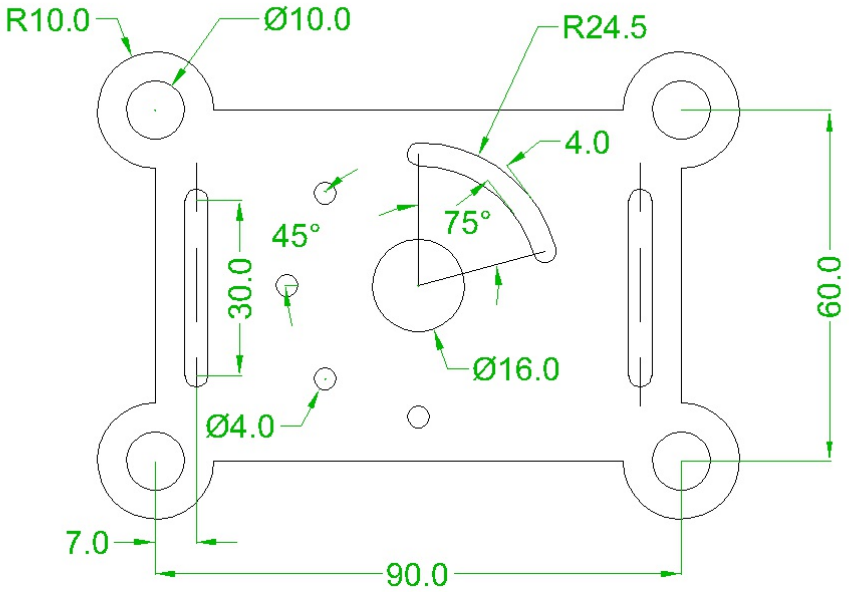
R10.0
Ø10.0
R24.5
4.0
75°
45°
30.0
60.0
Ø16.0
Ø4.0
7.0
90.0

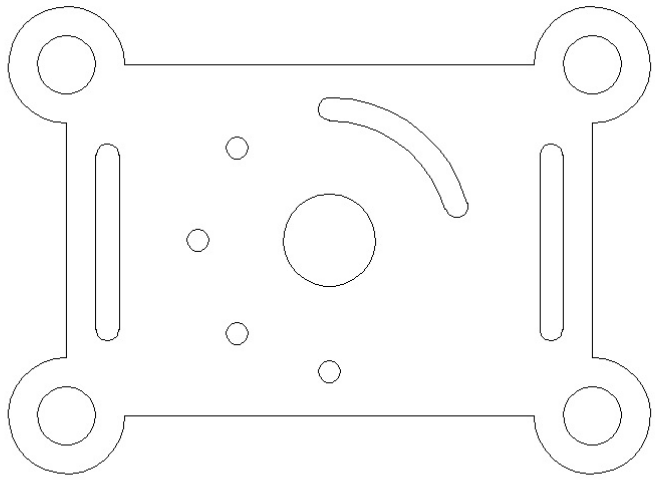

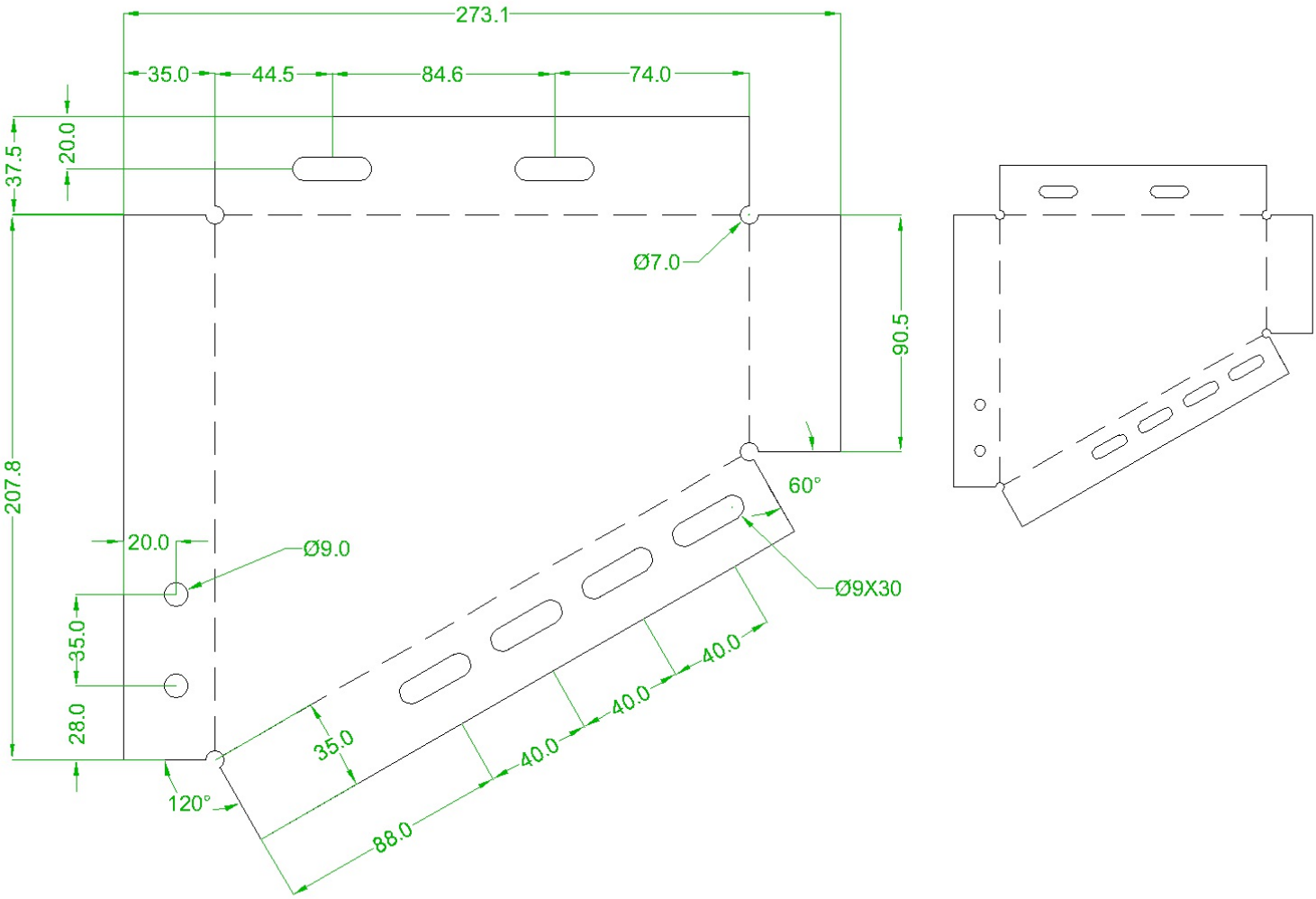
273.1
35.0
44.5
84.6
74.0
37.5
20.0
Ø7.0
90.5
207.8
60°
20.0
Ø9.0
Ø9X30
35.0
40.0
40.0
40.0
28.0
35.0
120°
88.0

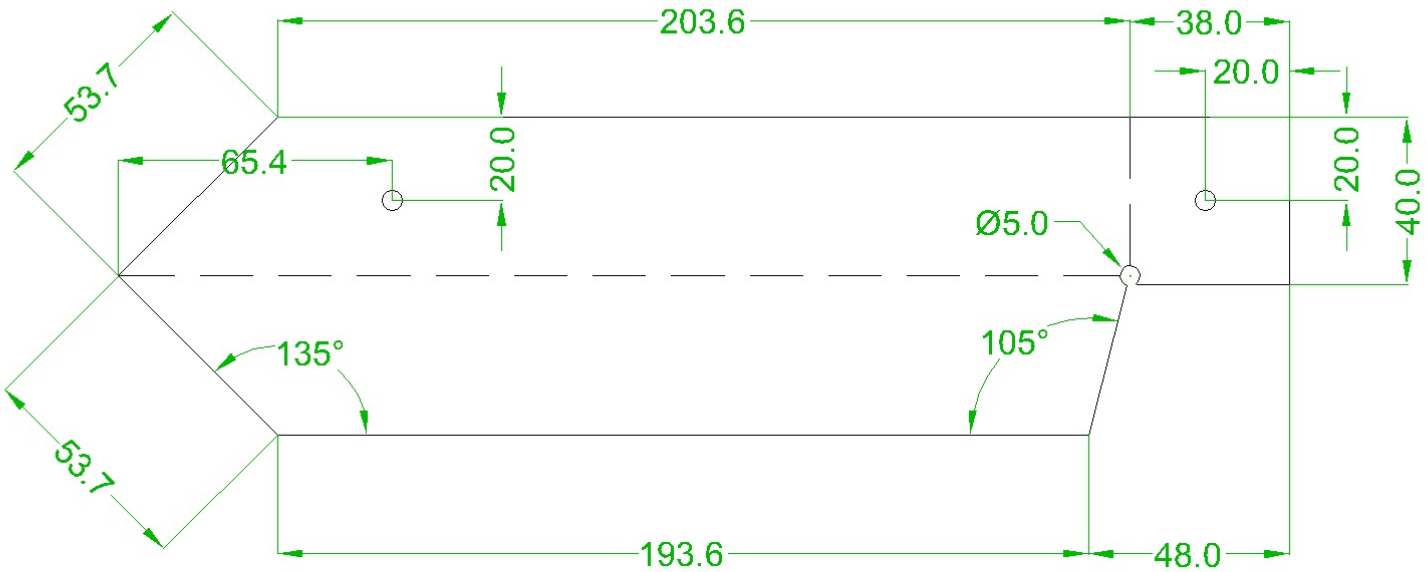
203.6
38.0
20.0
53.7
65.4
20.0
20.0
40.0
Ø5.0
135°
105°
53.7
193.6
48.0

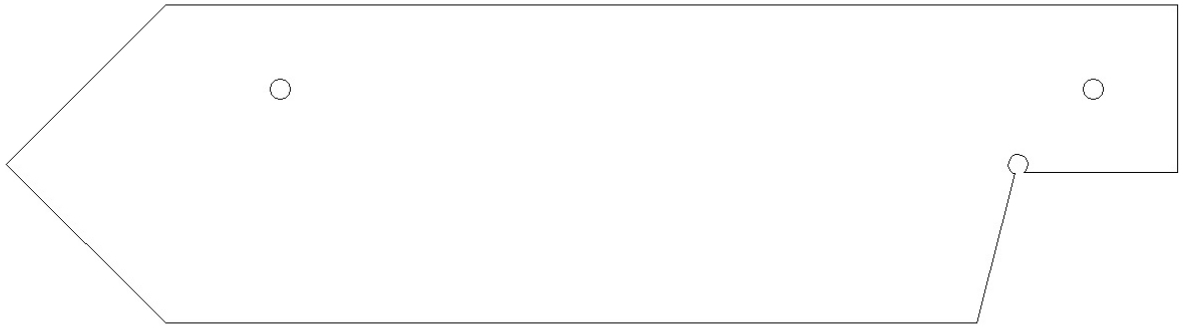

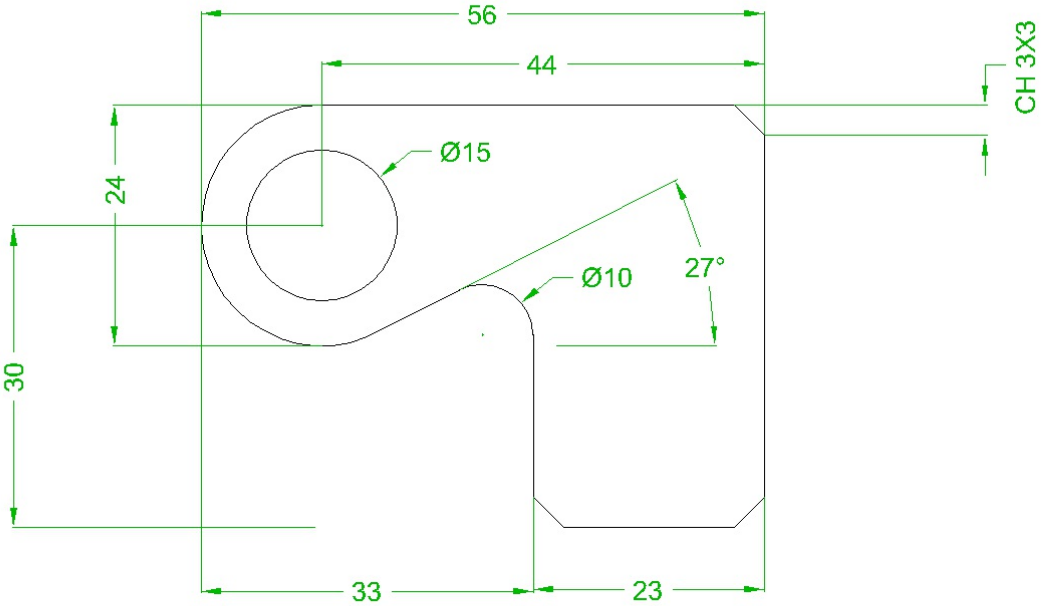
56
44
CH 3X3
Ø15
24
27°
Ø10
30
33
23

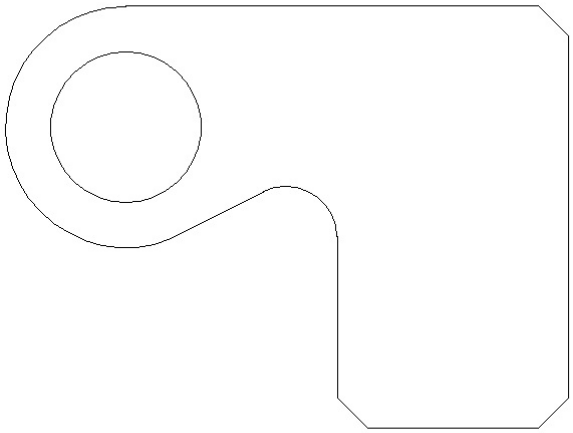

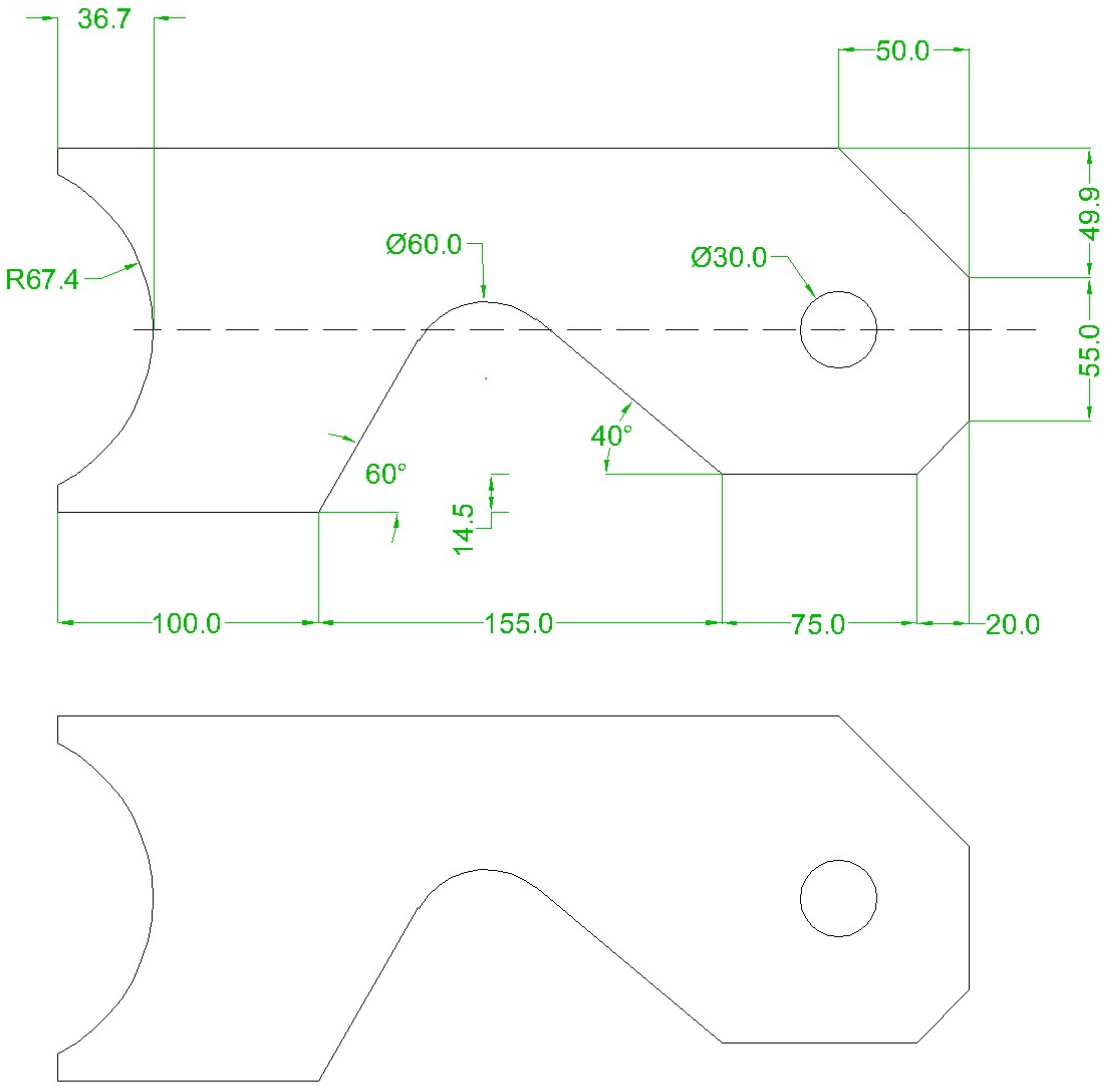
36.7
50.0
49.9
55.0
R67.4
Ø60.0
Ø30.0
40°
60°
14.5
100.0
155.0
75.0
20.0

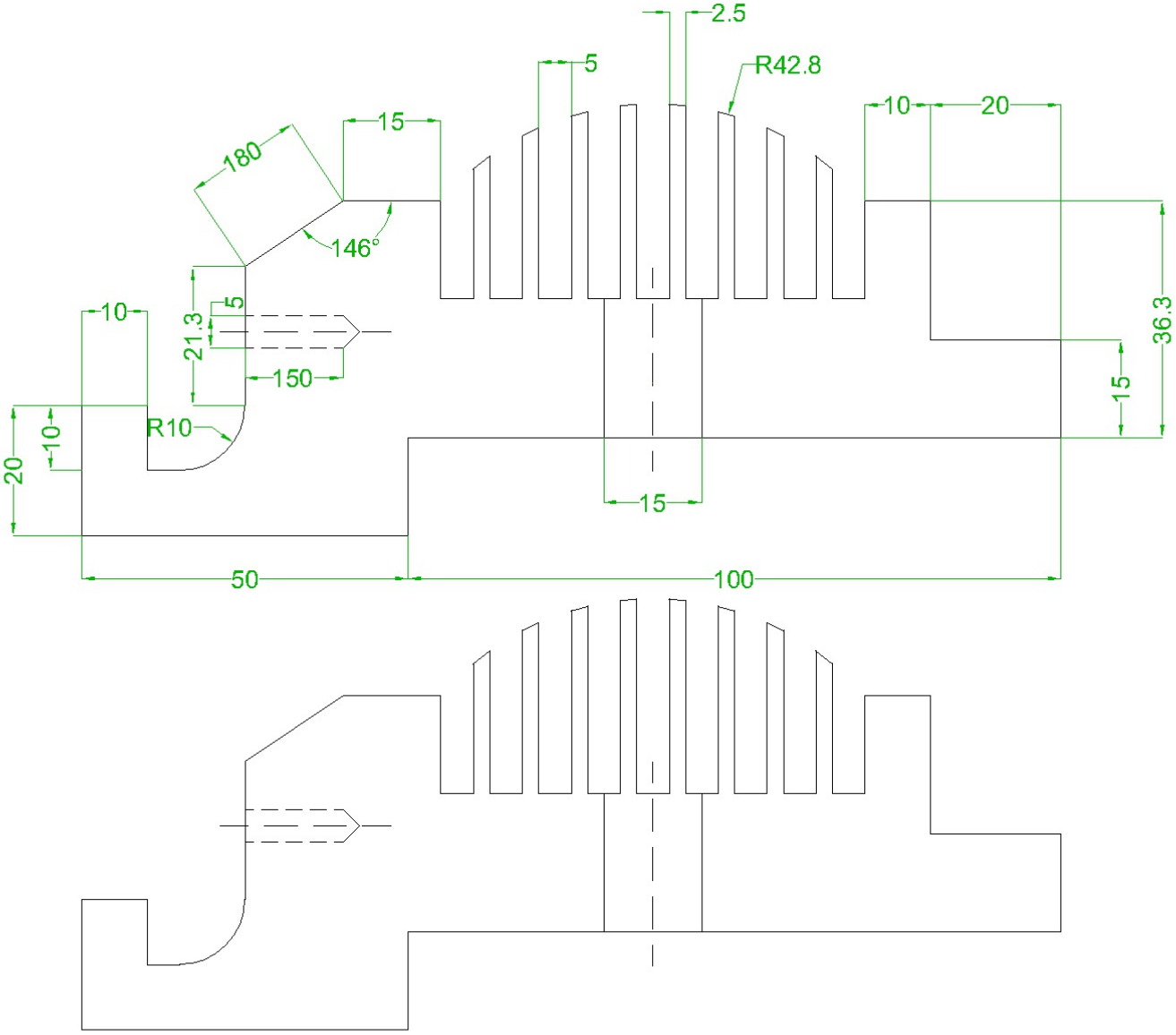
2.5
5
R42.8
10
20
15
180
146°
10
5
21.3
150
36.3
15
R10
10
20
15
50
100

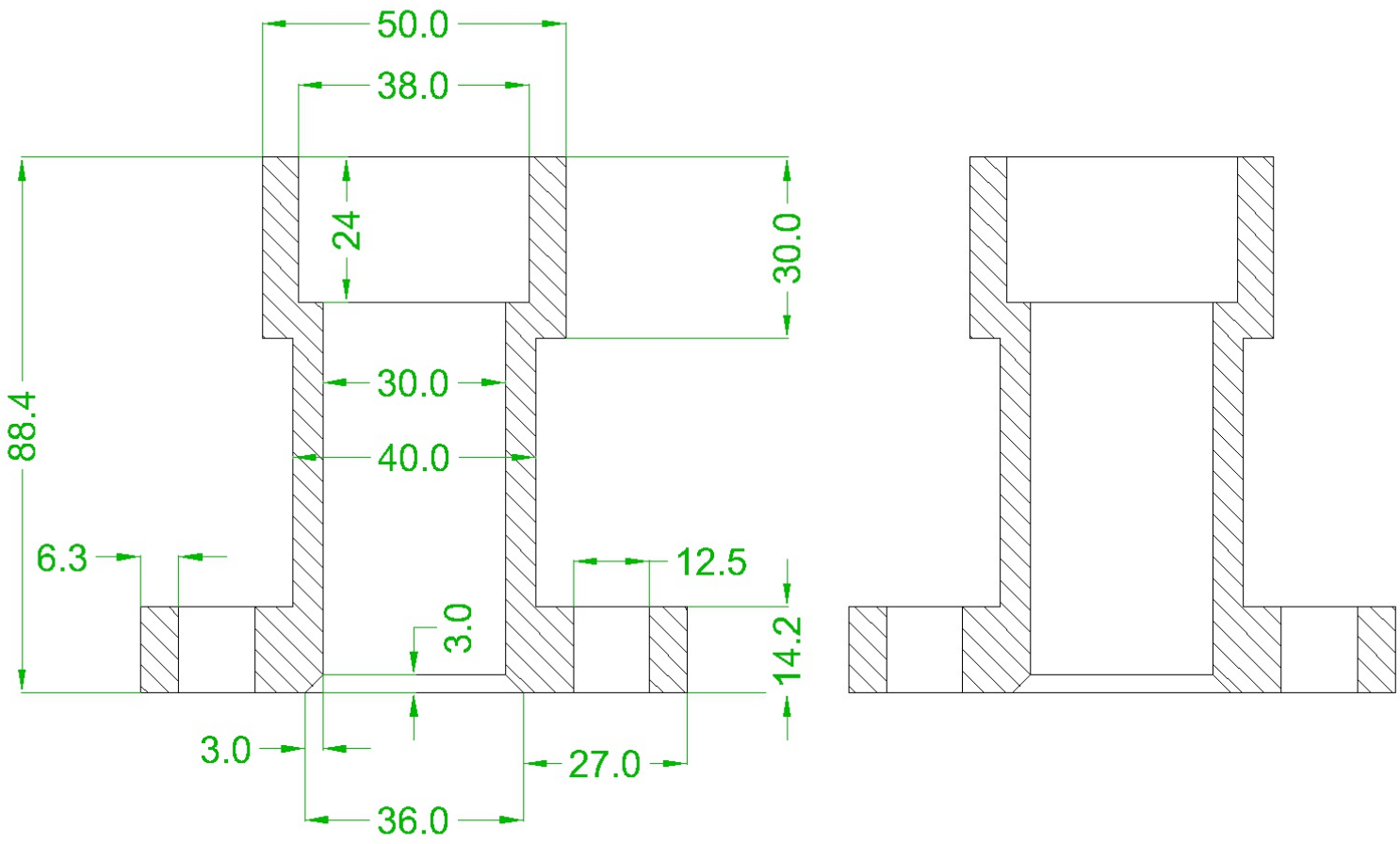
50.0
38.0
24
30.0
88.4
30.0
40.0
6.3
12.5
3.0
14.2
3.0
27.0
36.0

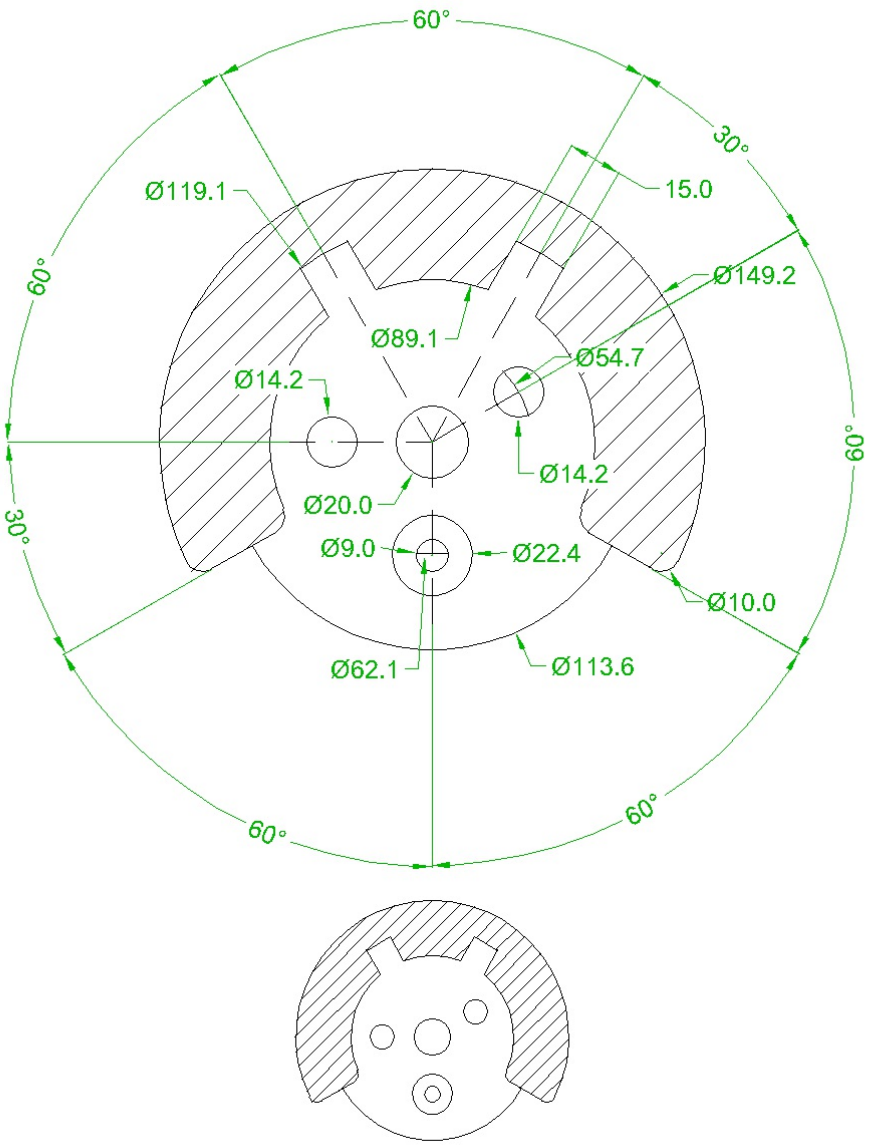
60°
30°
60°
60°
30°
60°
60°
Ø119.1
15.0
Ø149.2
Ø89.1
Ø54.7
Ø14.2
Ø14.2
Ø20.0
Ø9.0
Ø22.4
Ø10.0
Ø62.1
Ø113.6

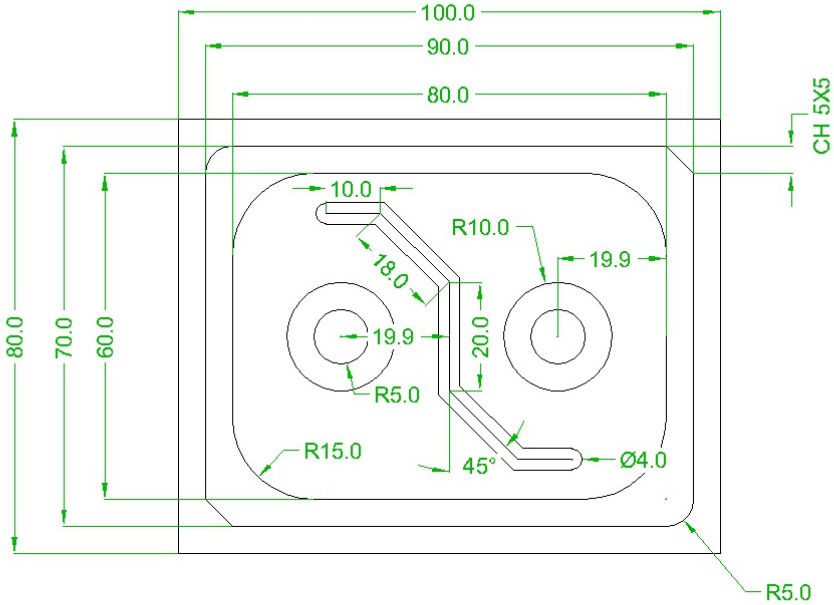
100.0
90.0
80.0
CH 5X5
10.0
R10.0
19.9
18.0
20.0
19.9
R5.0
80.0
70.0
60.0
R15.0
45°
Ø4.0
R5.0

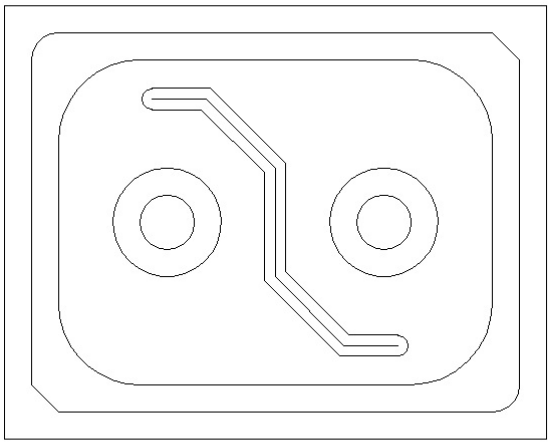

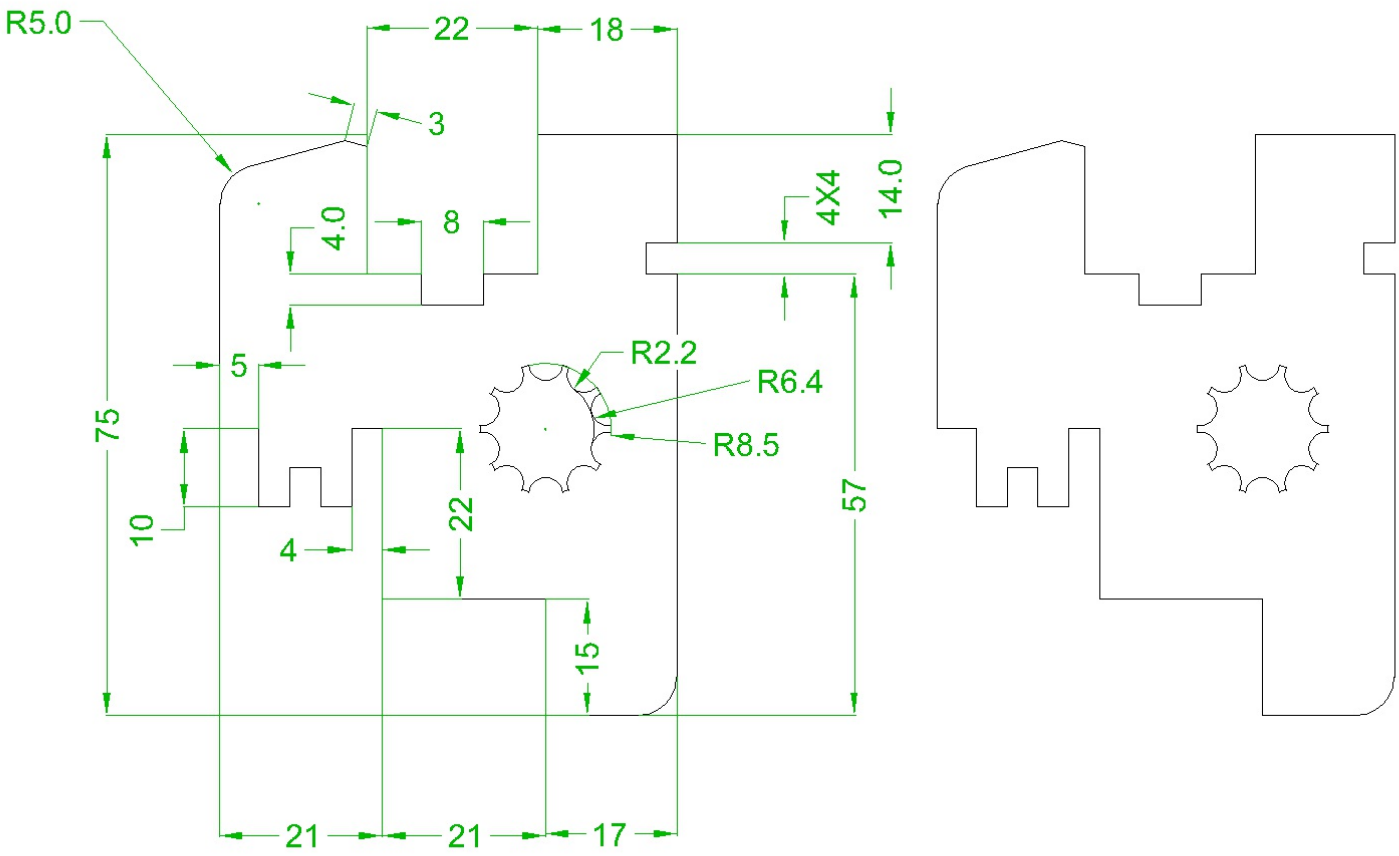
R5.0
22
18
3
4.0
8
4X4
14.0
5
R2.2
R6.4
R8.5
75
10
4
22
57
15
21
21
17

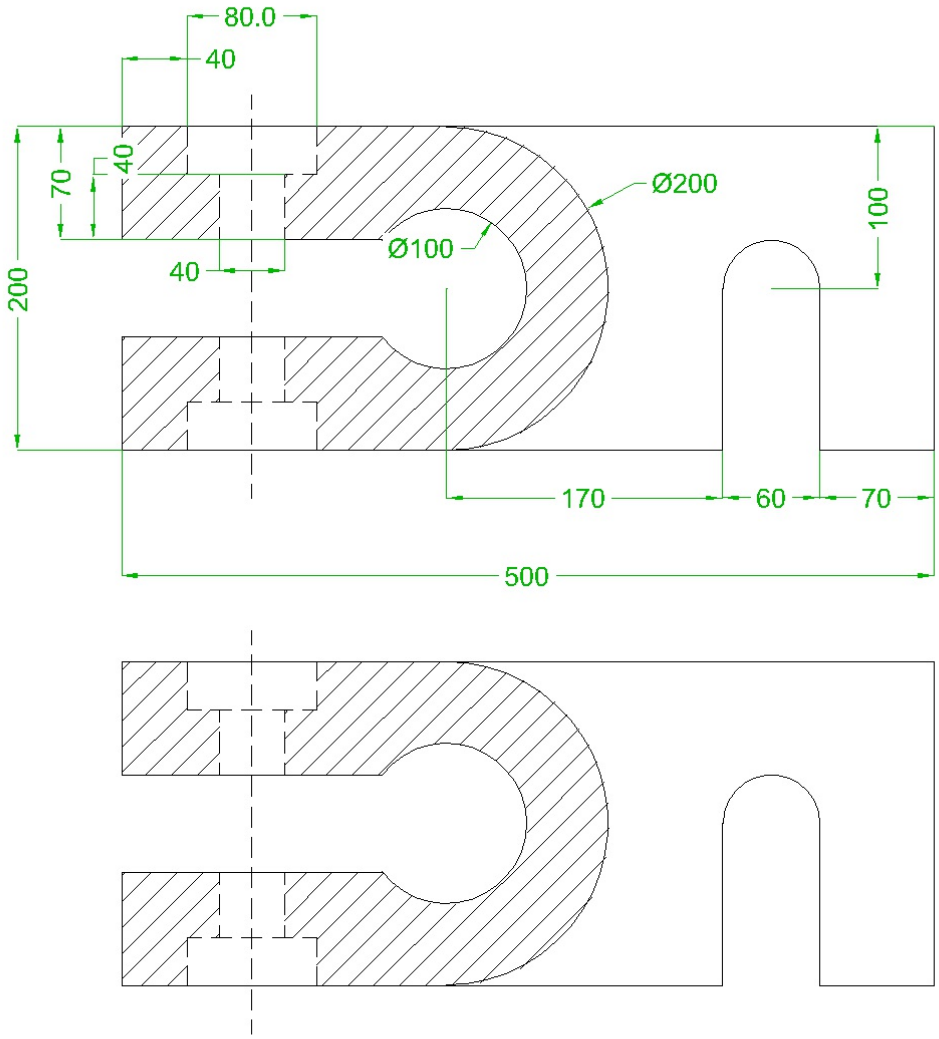
80.0
40
40
70
200
40
Ø200
Ø100
100
170
60
70
500

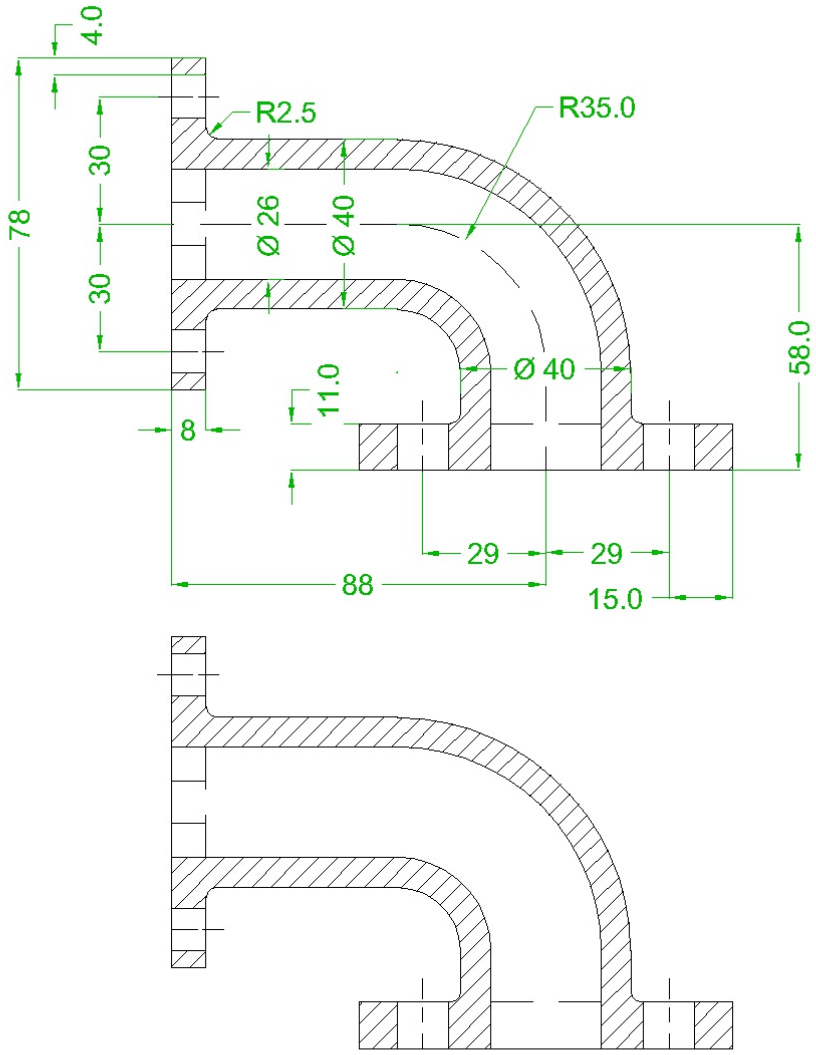
4.0
R2.5
R35.0
30
78
Ø 26
Ø 40
30
Ø 40
58.0
11.0
8
29
29
88
15.0

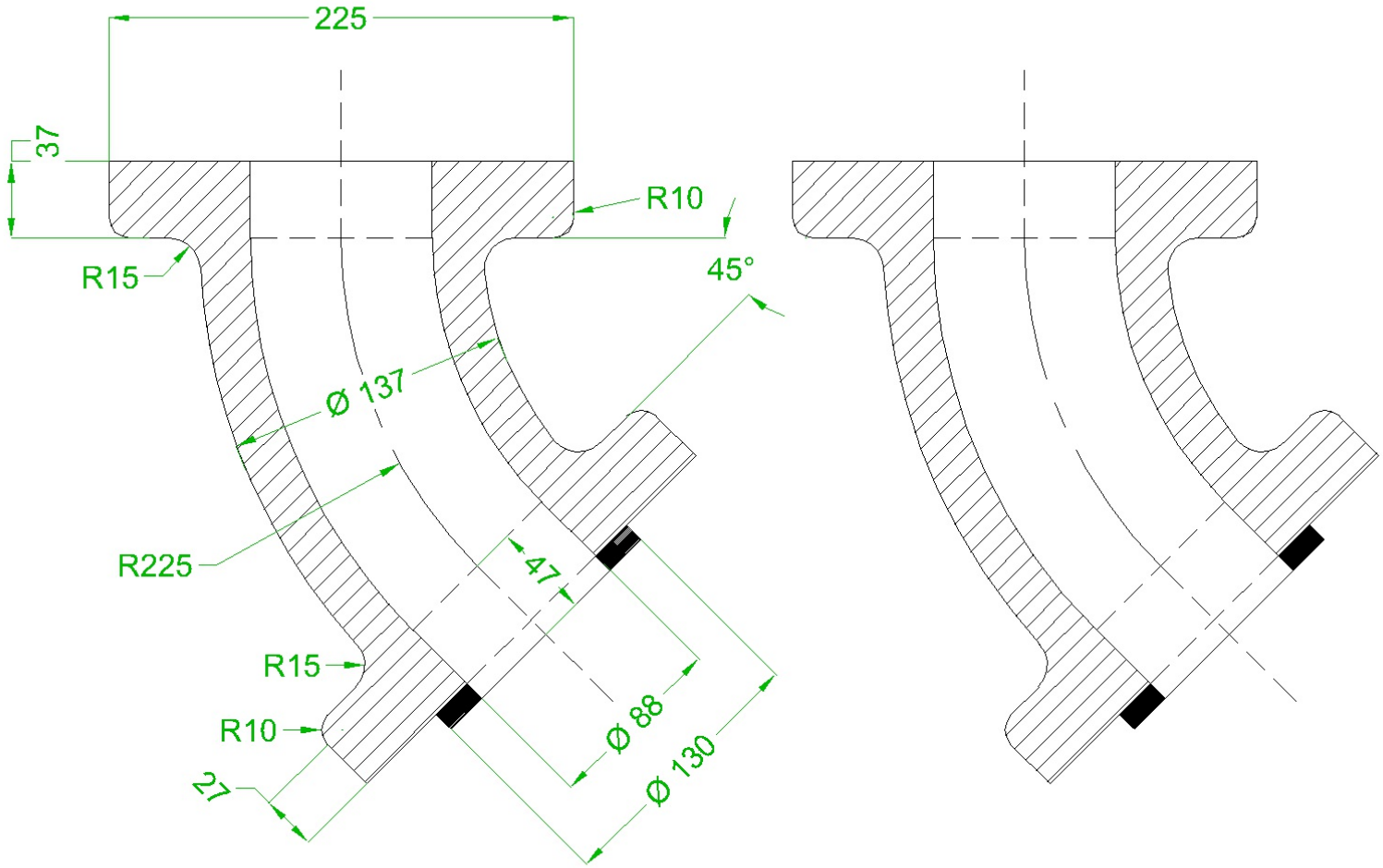
225
37
R10
R15
45°
Ø 137
R225
47
R15
R10
Ø 88
Ø 130
27

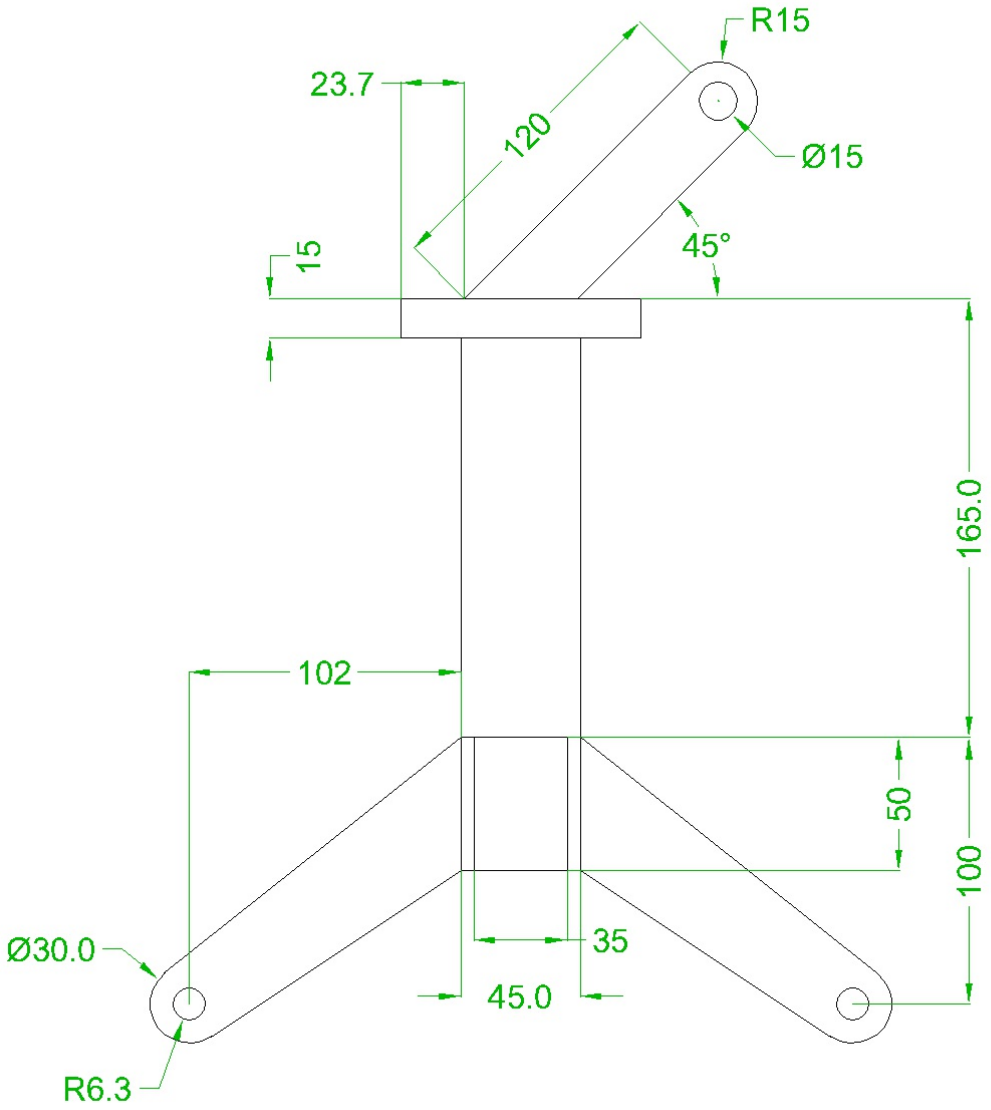
R15
23.7
120
Ø15
45°
15
165.0
102
50
100
Ø30.0
35
45.0
R6.3

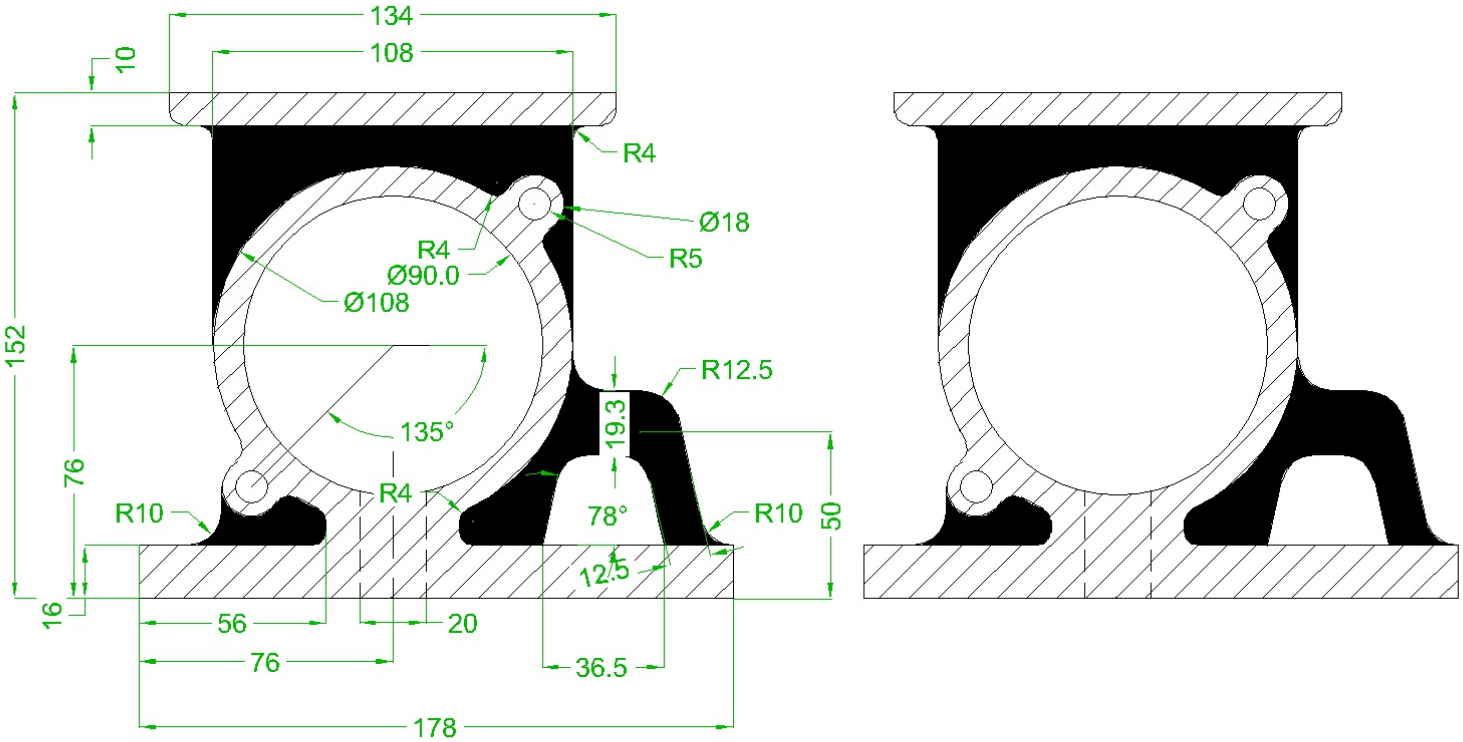
134
108
10
R4
Ø18
R4
Ø90.0
R5
Ø108
152
R12.5
19.3
135°
76
R4
R10
78°
R10
50
12.5
16
56
20
76
36.5
178

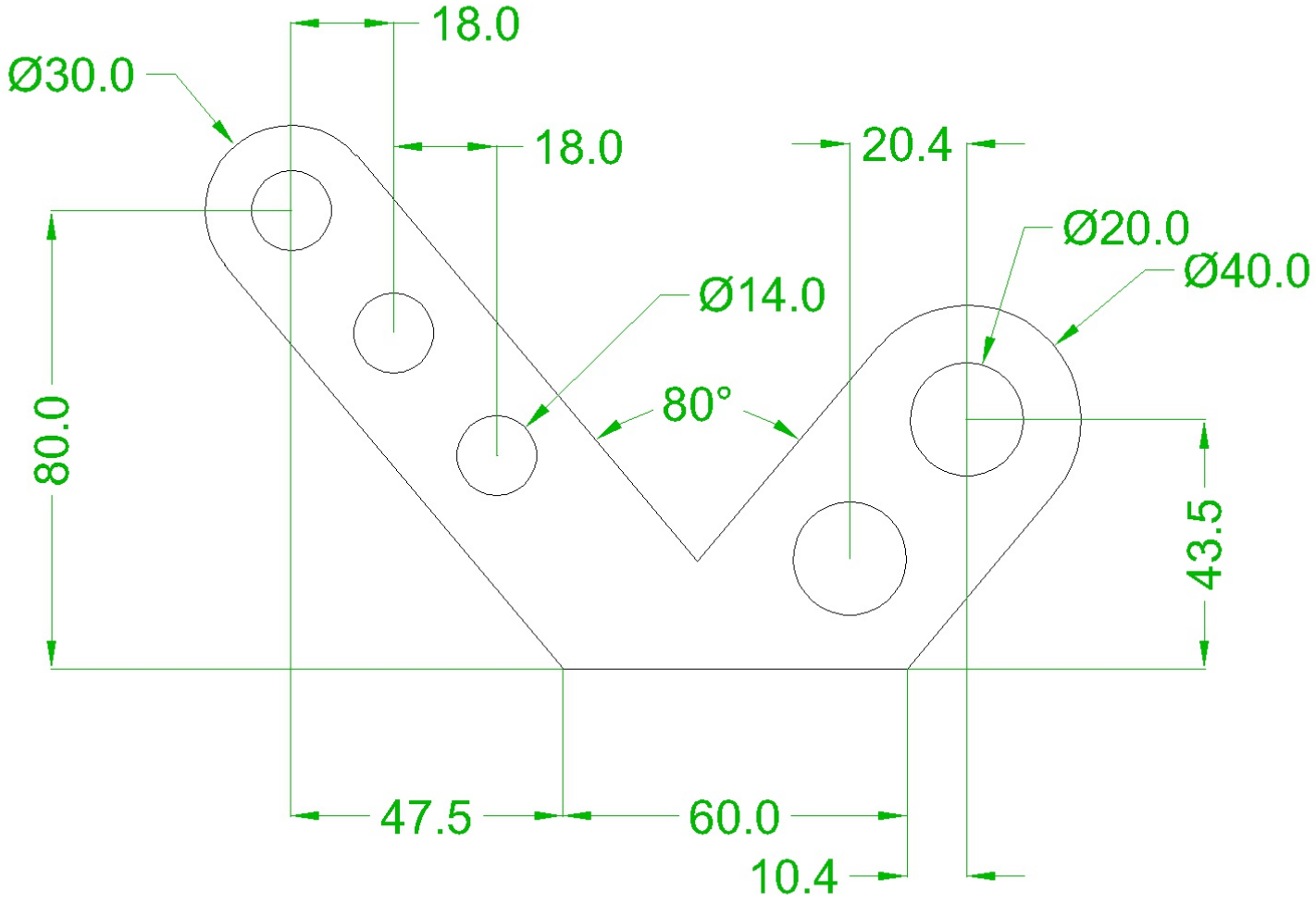
18.0
Ø30.0
18.0
20.4
Ø20.0
Ø40.0
Ø14.0
80°
80.0
43.5
47.5
60.0
10.4

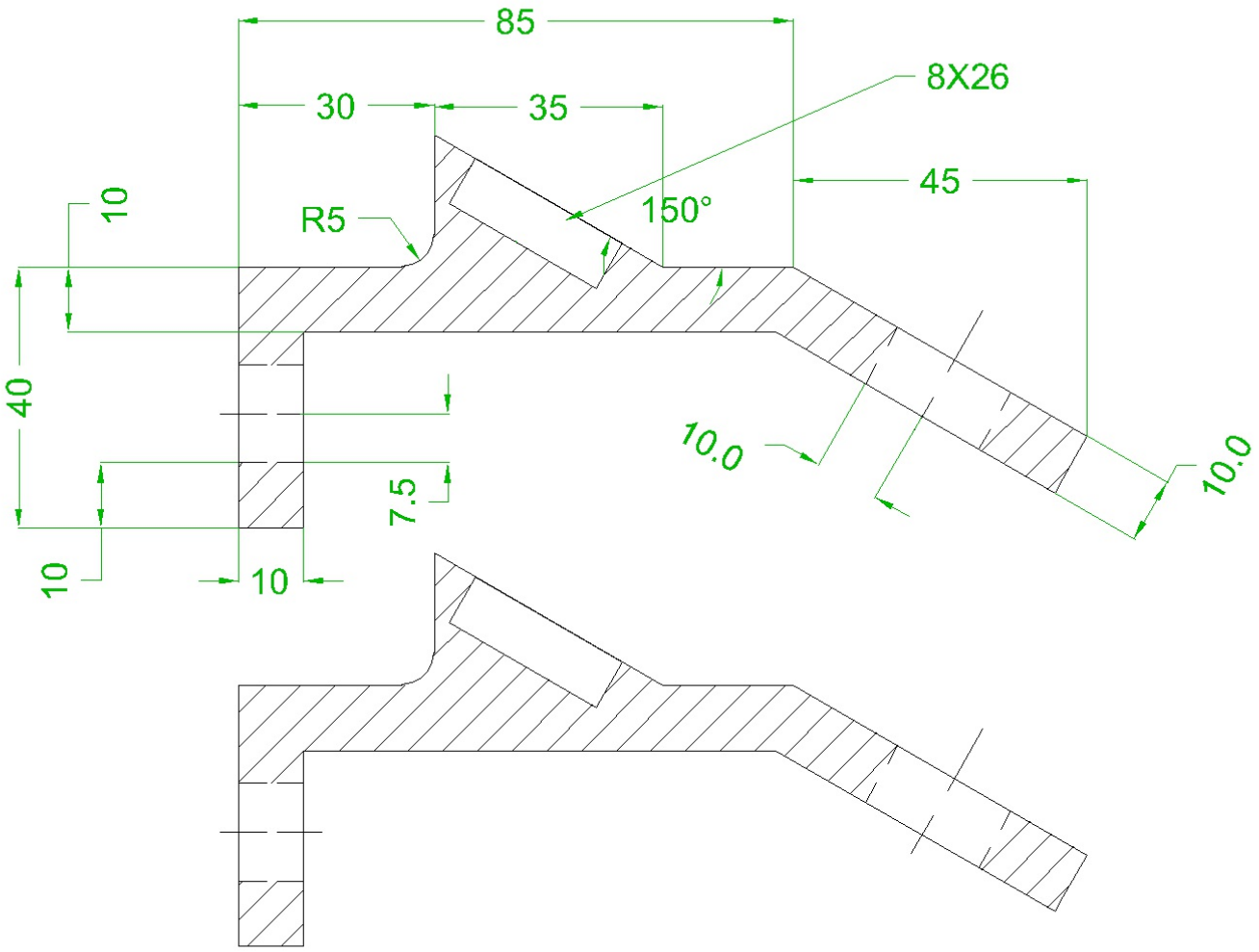
85
30
35
8X26
45
10
R5
150°
40
10.0
10.0
7.5
10
10

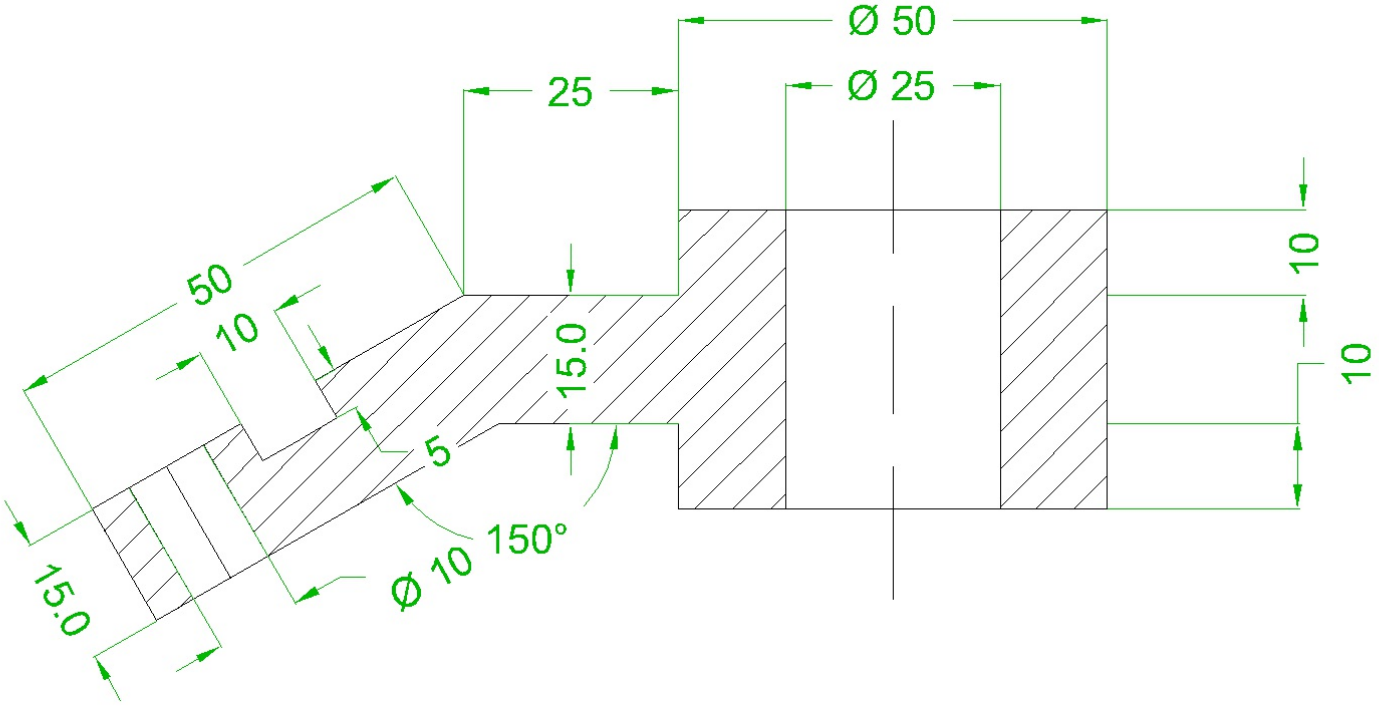
Ø 50
25
Ø 25
50
10
15.0
5
150°
Ø 10
15.0
10
10

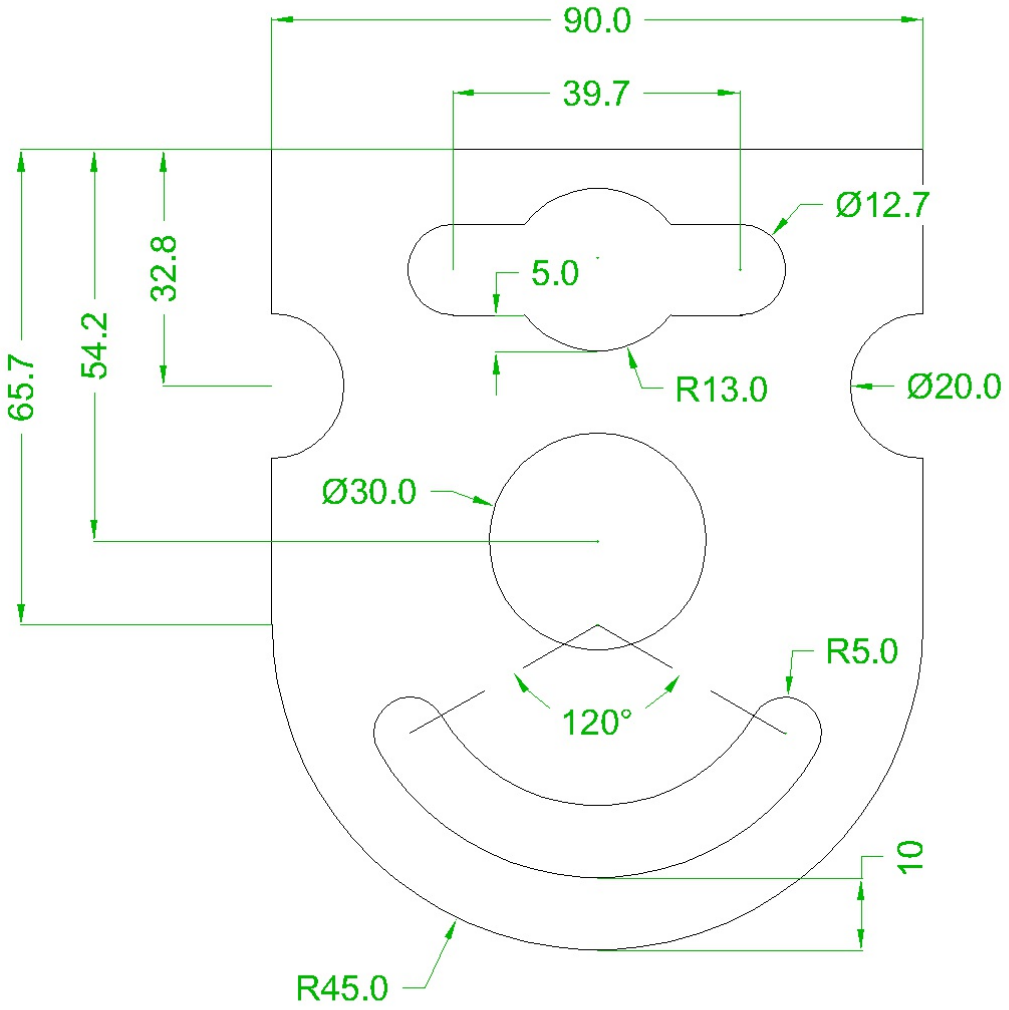
90.0
39.7
Ø12.7
5.0
32.8
54.2
65.7
R13.0
Ø20.0
Ø30.0
R5.0
120°
10
R45.0

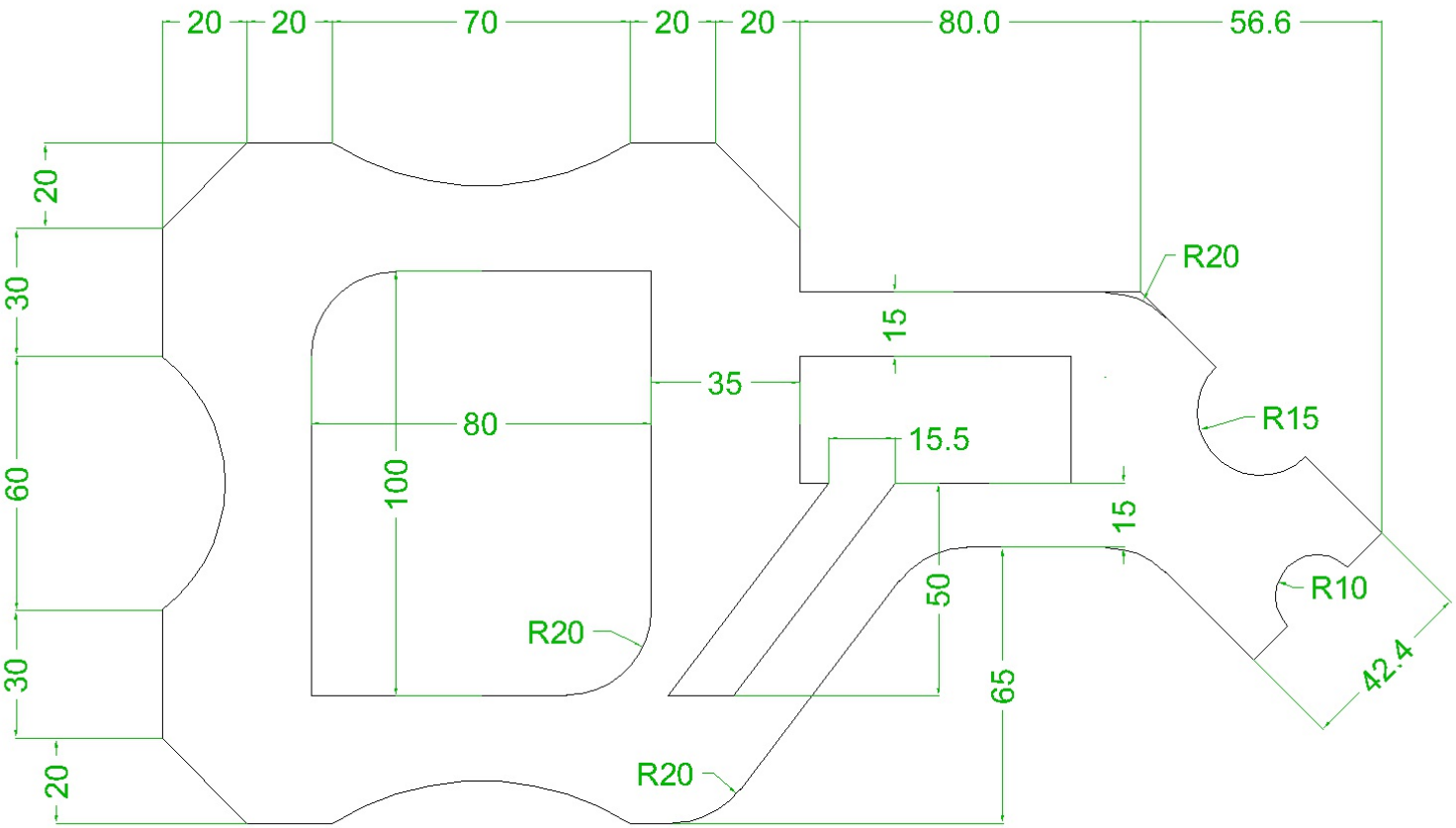
20
20
70
20
20
80.0
56.6
20
30
60
30
20
R20
15
35
80
100
15.5
R15
15
50
65
R10
42.4
R20
R20

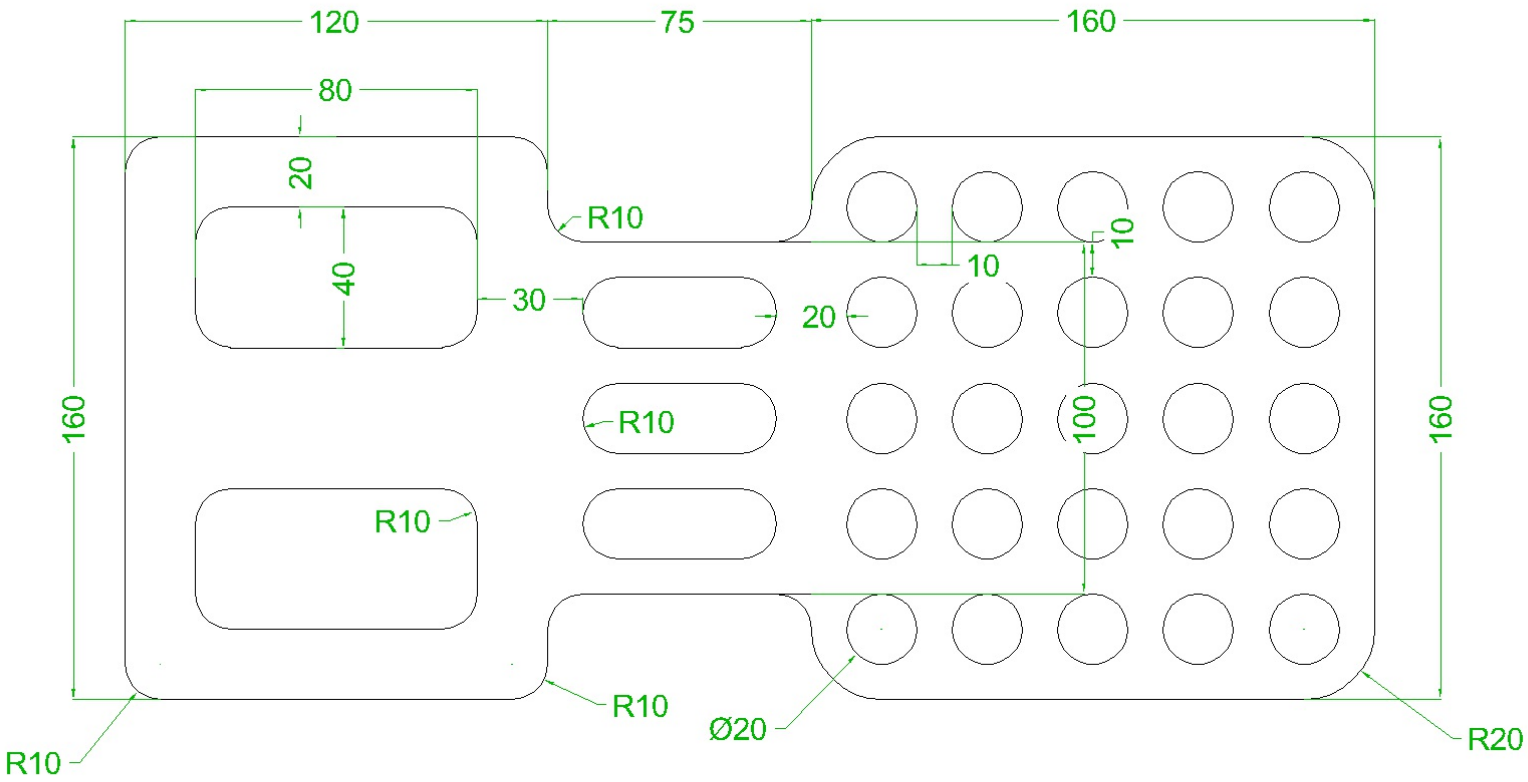
120
75
160
80
20
40
R10
30
20
10
10
100
160
160
R10
R10
R10
R10
Ø20
R20

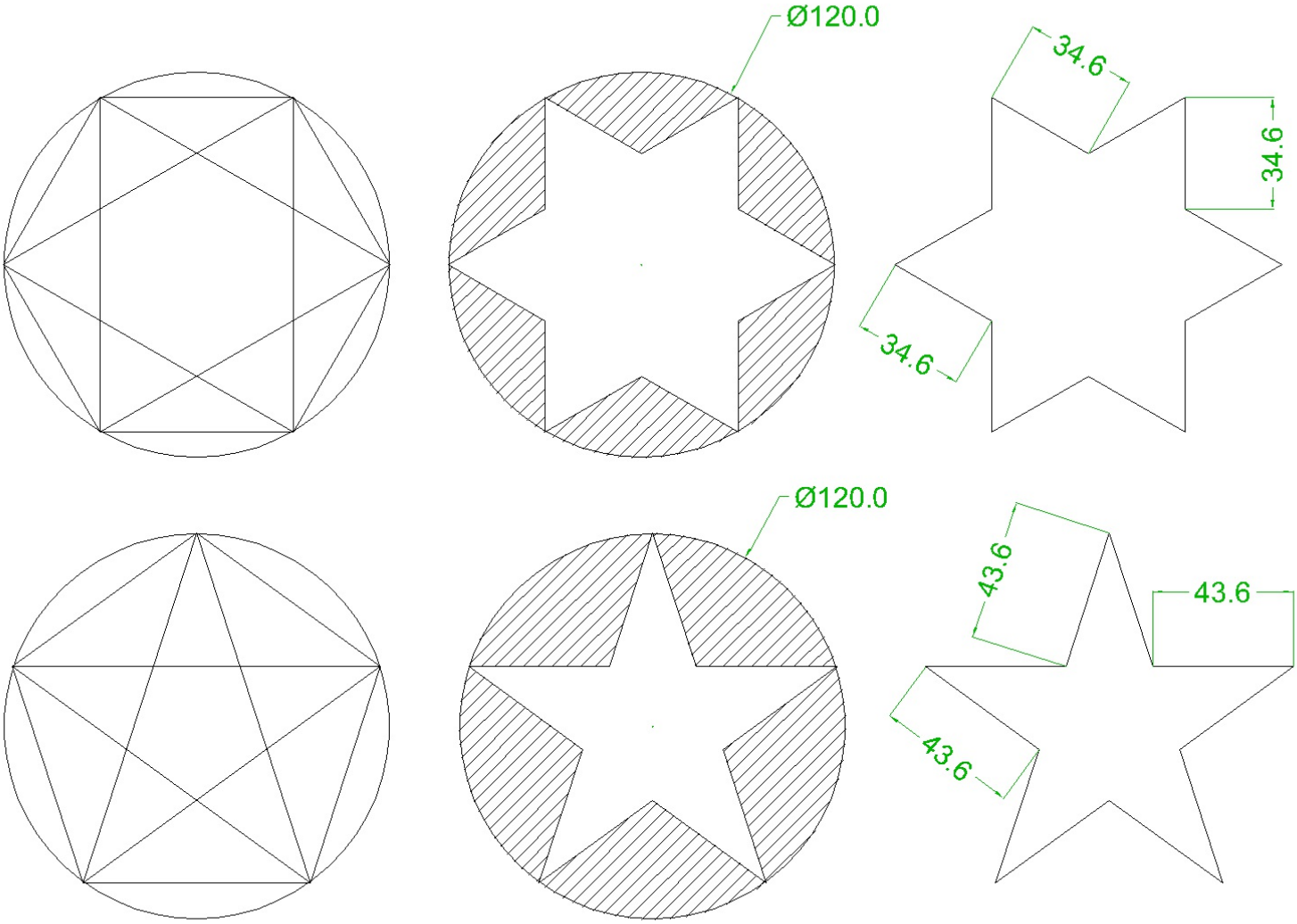
Ø120.0
34.6
34.6
34.6
Ø120.0
43.6
43.6
43.6

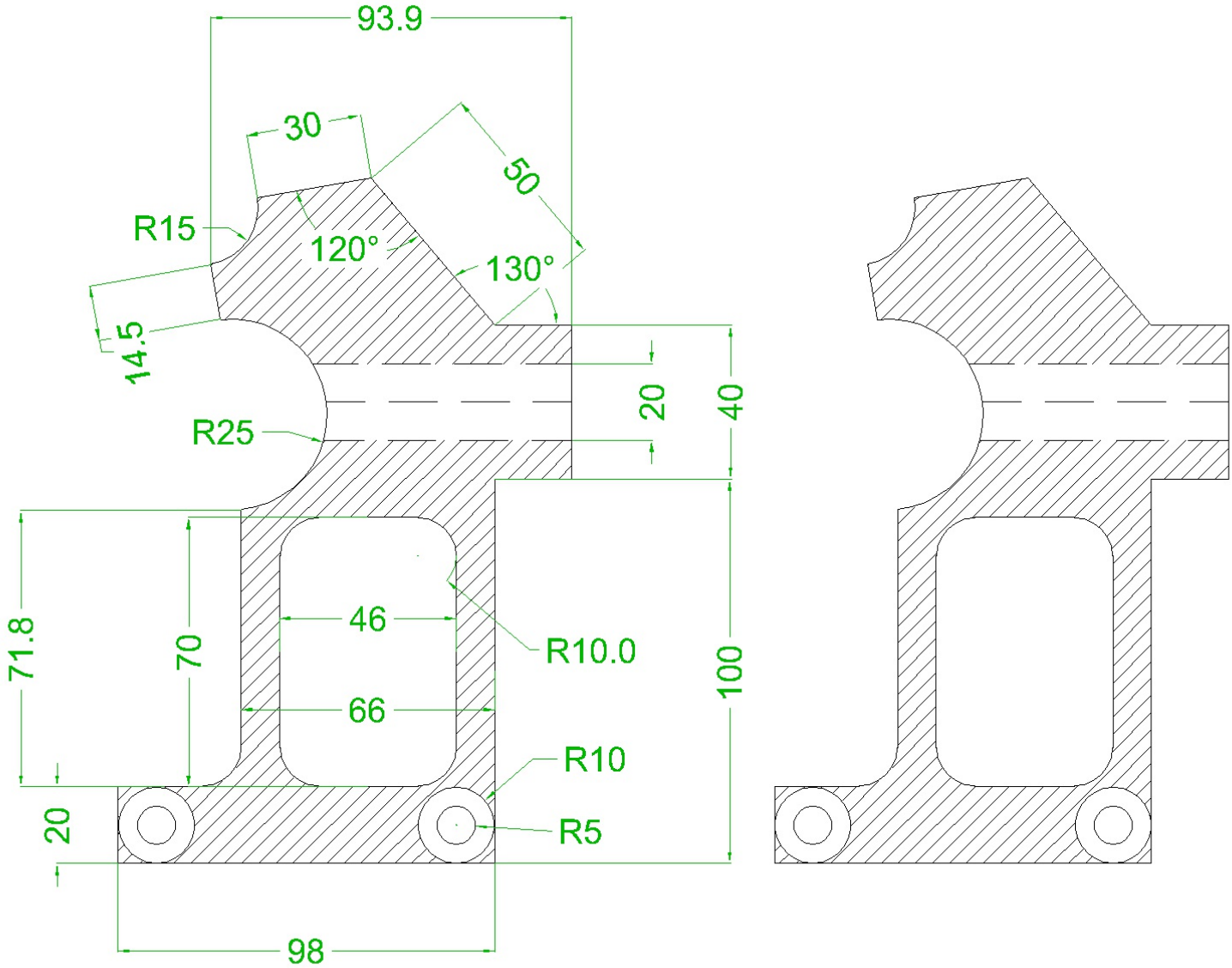
93.9
30
50
R15
120°
130°
14.5
20
40
R25
71.8
70
46
R10.0
100
66
R10
20
R5
98

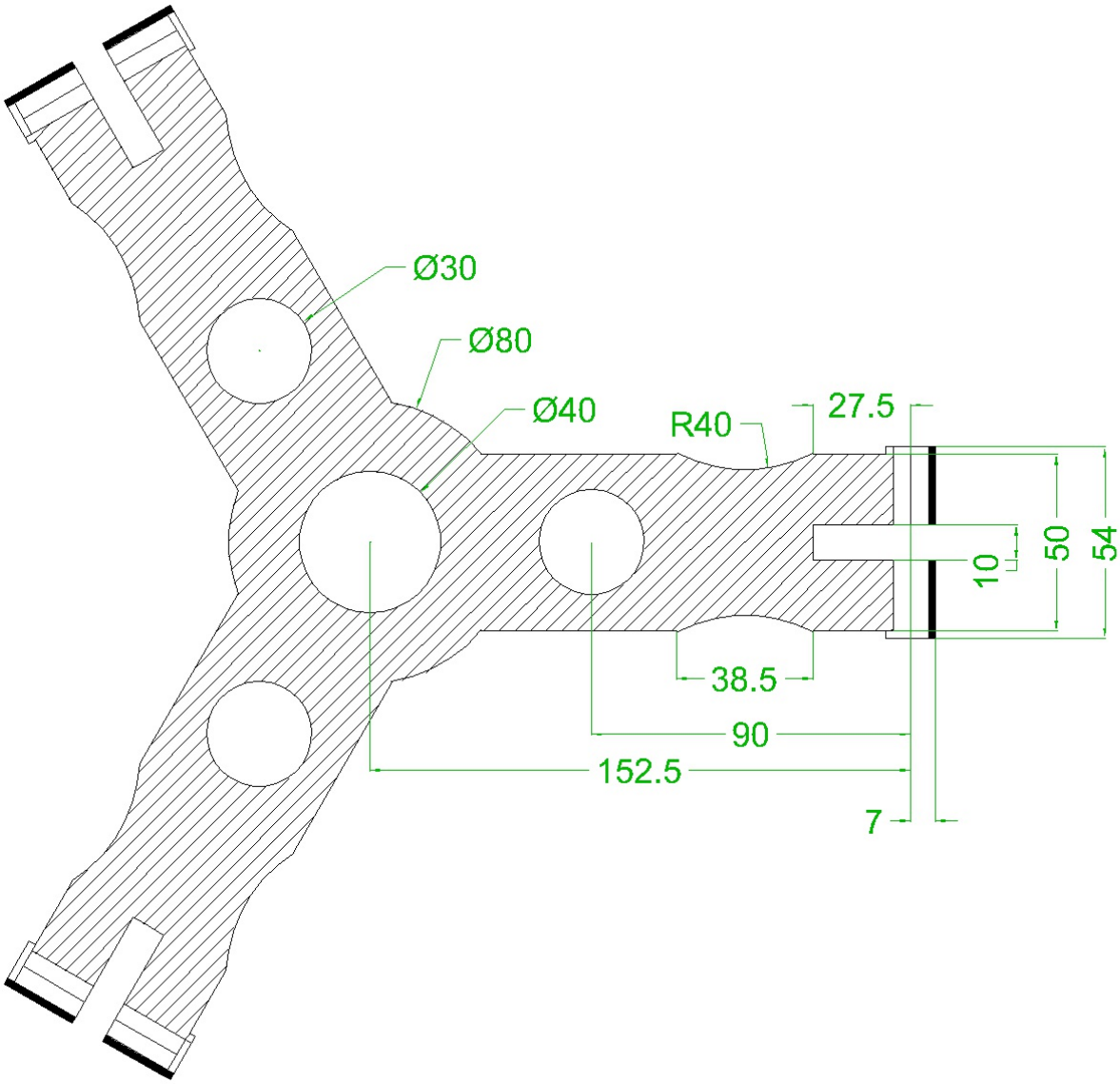
Ø30
Ø80
Ø40
R40
27.5
50
54
10
38.5
90
152.5
7